TerraPower: Innovation, TWRs and Salt

Presentation to the FHR IRP Benchmarking Workshop

April 15, 2016

Robert Petroski

About TerraPower

- TerraPower is fundamentally a sustainable energy company
- TerraPower's mission:
  - *To invent and develop for commercialization new nuclear concepts and products, including the Traveling Wave Reactor and industrial and human health applications.*
- More recently: a greater sense of urgency to reduce emissions

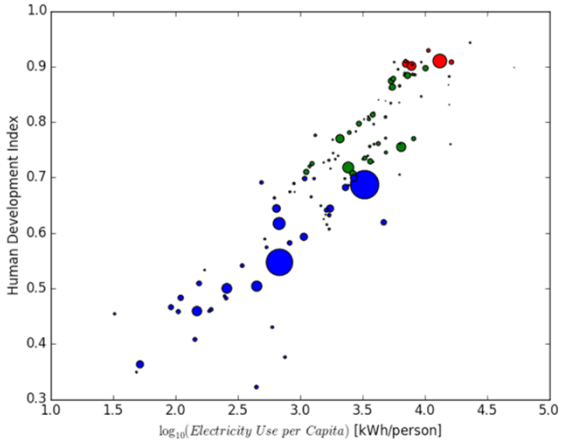

Correlation between electricity use per capita and Human Development Index

Copyright© 2016 TerraPower, LLC. All Rights Reserved.

TerraPower

What's unique about TerraPower

- A focus on big, long term challenges
- See things through: bring our ideas through detailed engineering and commercialization
- In existence over 8 years; currently over 100 employees
- Committed to innovation—ongoing research ranging all the way from napkin sketches to major programs
  - New nuclear energy systems
  - New nuclear applications

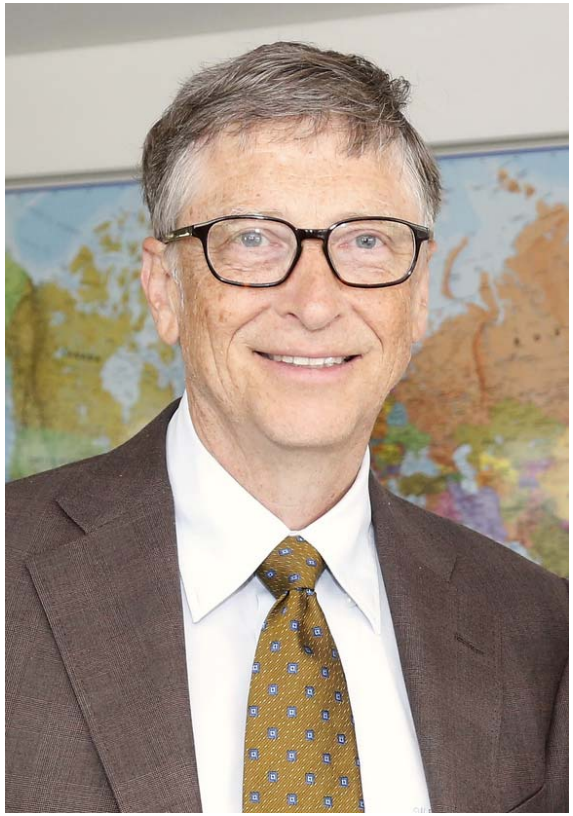

By Russell Watkins/DFID [CC BY 2.0 (http://creativecommons.org/licenses/by/2.0)], via Wikimedia Commons

TerraPower Founder and Chairman Bill Gates

Copyright© 2016 TerraPower, LLC. All Rights Reserved.

The Traveling Wave Reactor (TWR)

- Our goal is to develop a reactor that will be deployed worldwide
  - High degree of autonomous safety
  - Affordable
  - "Planetary-scale" sustainable
  - No fuel reprocessing
- The TWR—a breed-and-burn sodium fast reactor—meets these criteria

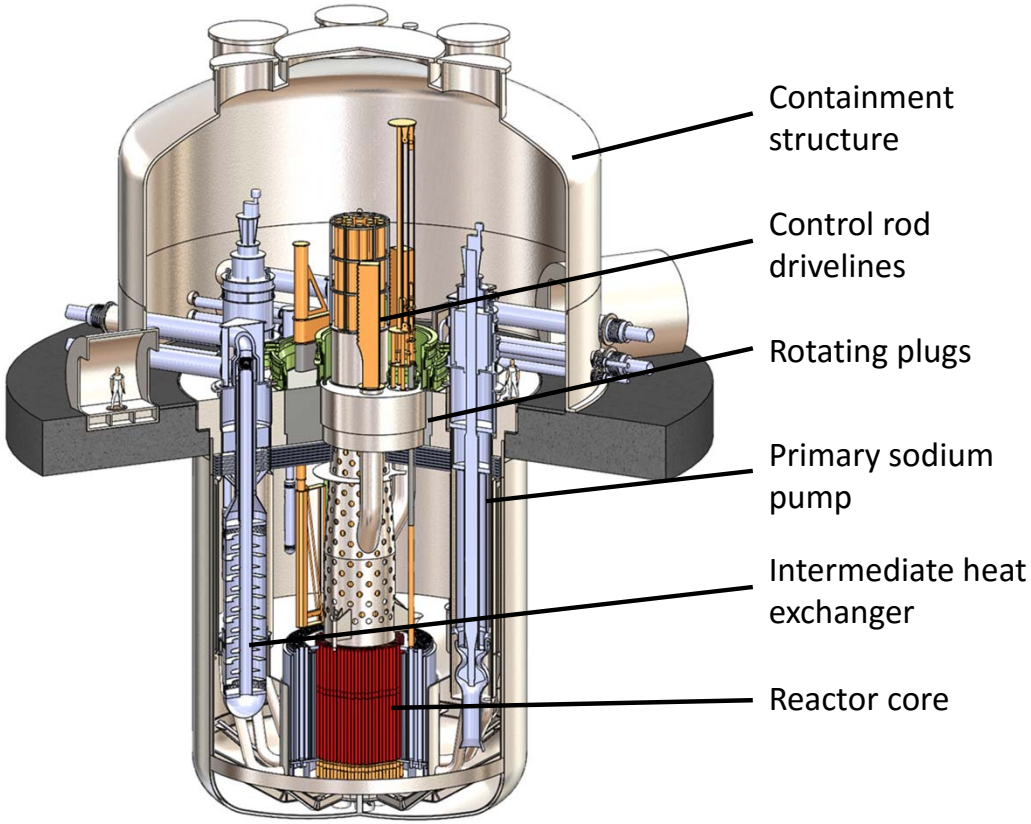

Illustration of TWR components inside containment

Copyright© 2016 TerraPower, LLC. All Rights Reserved.

TerraPower

The Traveling Wave Reactor – Breed and Burn

- First breeds fissile Pu-239 in U-238 feed fuel
- Unlike in a traditional SFR, TWR fuel is directly used after breeding, without a reprocessing step
  - Once-through fuel cycle with 30x uranium utilization of LWRs
- Requires:
  - An excellent neutron economy – judicious use of structural materials
  - High burnup fuels and irradiation resistant materials

Traditional fast breeder (SFR)

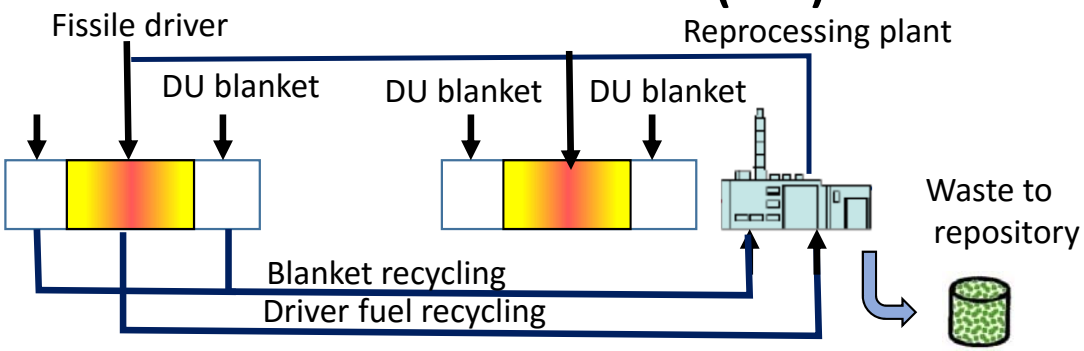

Traveling Wave Reactor (TWR)

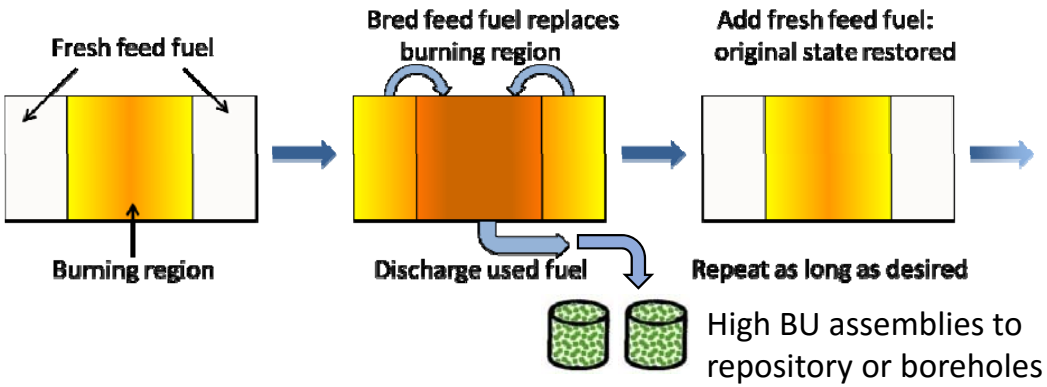

Copyright© 2016 TerraPower, LLC. All Rights Reserved.

TerraPower

TWR development around the country and world

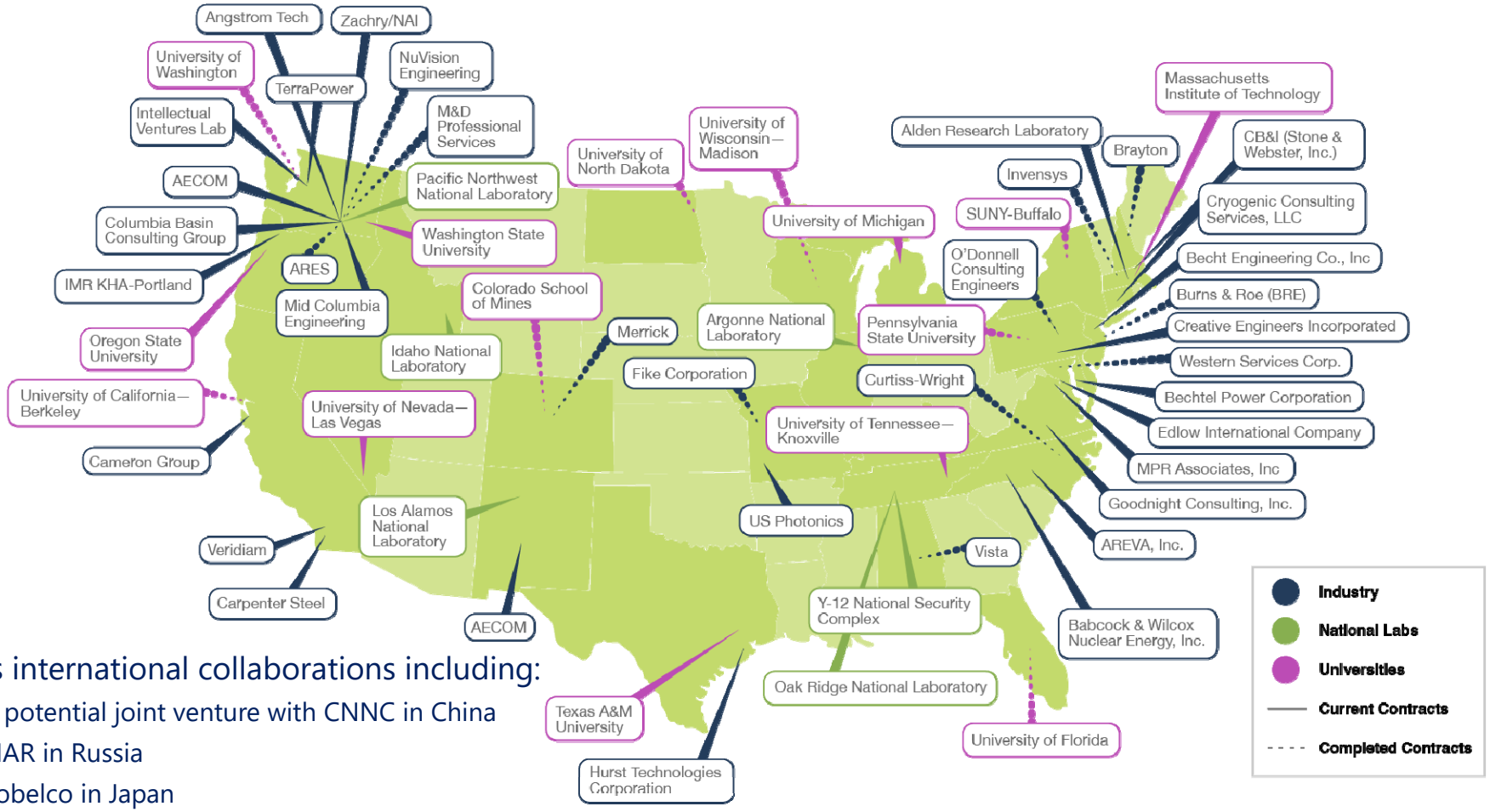

Plus international collaborations including:

- A potential joint venture with CNNC in China
- RIAR in Russia
- Kobelco in Japan

Copyright© 2016 TerraPower, LLC. All Rights Reserved.

TerraPower

TerraPower testing activities

- Fuels and materials testing in ATR and BOR-60
- Testing of commercial fabrication and manufacturing techniques
- Growing lab capabilities, including:
  - Full-scale hydraulic testing
  - High temperature sodium
  - Corrosion testing
  - Salts

Copyright© 2016 TerraPower, LLC. All Rights Reserved.

TerraPower

The Molten Chloride Fast Reactor (MCFR)

- Initially developed from applying TWR research to different fuel types
- Liquid fuels were of particular interest
  - No material dose limits
  - Very safe—Low pressure, high heat capacity, high boiling point strong negative feedback
  - Potential for high power densities and compactness
  - Online refueling
  - Flexibility to burn many types of fuel
- Discovered that for certain salt compositions and configurations, it was possible for breed-and-burn *without any fuel salt processing*
  - Ability to *close fuel cycle* with *no reprocessing*—actinides can be directly reused to start up new MCFRs

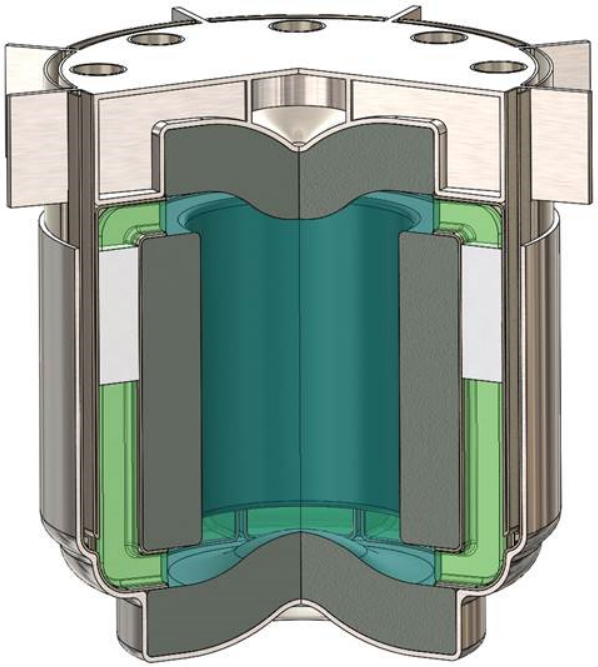

Early depiction of an MCFR reactor vessel

Copyright© 2016 TerraPower, LLC. All Rights Reserved.

The Molten Chloride Fast Reactor (MCFR)

- TerraPower's MCFR represents another class of reactor that meets our objectives
  - High degree of autonomous safety
  - Affordable
  - "Planetary-scale" sustainable
  - No fuel reprocessing
- A relatively unexplored technological space: challenges and opportunities await!

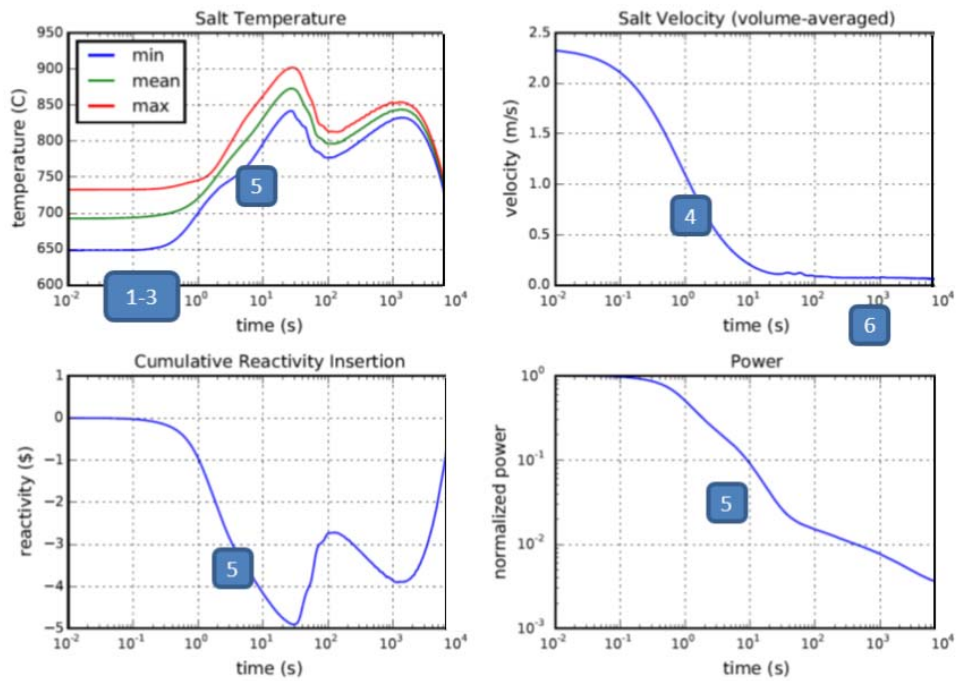

Analysis showing MCFR inherent shutdown in response to an unprotected loss of flow

Copyright© 2016 TerraPower, LLC. All Rights Reserved.

TerraPower

The biggest thing I've learned at TerraPower

- There's a tremendous amount of "art" present in every component of a nuclear power plant
  - I.e., the specialized knowledge you don't learn in school, and have to pick up through experience
  - Examples:
    - What's the best shape for a fuel assembly nozzle?
    - How do we attach the components of a fuel assembly to one another?
    - How do we manufacture our fuels and materials? (How do we manufacture salt?)
    - How do we fabricate a reactor vessel head? A heat exchanger?
    - Each with a thousand potential answers and tradeoffs

By User:Husky and h3m3ls, Mischa de Muynck and Niels [CC BY-SA 3.0 (http://creativecommons.org/licenses/by-sa/3.0)], via Wikimedia Commons

From *The Creys-Malville power plant*, 1987

Copyright© 2016 TerraPower, LLC. All Rights Reserved.

TerraPower

The biggest thing I've learned at TerraPower

- Art is hard to develop in the energy industry, particularly nuclear
  - Machines are big and expensive
  - Operating environments are unique
  - Extremely high requirements on quality and reliability
- Major kudos to the FHR initiative for creating new art!

By User: Kuebi = Armin Kübelbeck [CC BY-SA 3.0 (http://creativecommons.org/licenses/by-sa/3.0)], via Wikimedia Commons

A non-nuclear pile of salt

Copyright© 2016 TerraPower, LLC. All Rights Reserved.

TerraPower