THERMAL HYDRAULICS EXPERIMENTAL AND NUMERICAL STUDIES OF A HIGH TEMPERATURE MOLTEN SALT

V. Ghetta, J. Giraud, P. R. Rubiolo, M. Tano Retamales

CNRS/IN2P3/LPSC - Grenoble

FHR Benchmark Workshop, April 14-15, 2016 Berkeley

Starting Point: the MSFR Concept

- What is a MSFR ?
  - Liquid fuel reactor using a molten salt as fuel matrix and coolant (LiF)

    77,5% LiF + 18,7% ThF4 + 3,8% UF4

  - Based on a Thorium fuel cycle (^{232}Th / ^{233}U)
  - No solid moderator in the core to obtain a fast neutron spectrum ➡ strong coupling
  - No core internal structures
  - Online refueling
- Three reactor loops
  - Fuel salt loop
  - Intermediate loop
  - Thermal conversion loop
- Fuel loop operating conditions
  - High temperatures (~750°C)
  - Low pressure (~1 bar)
  - Fuel salt recirculation time (~4 s)

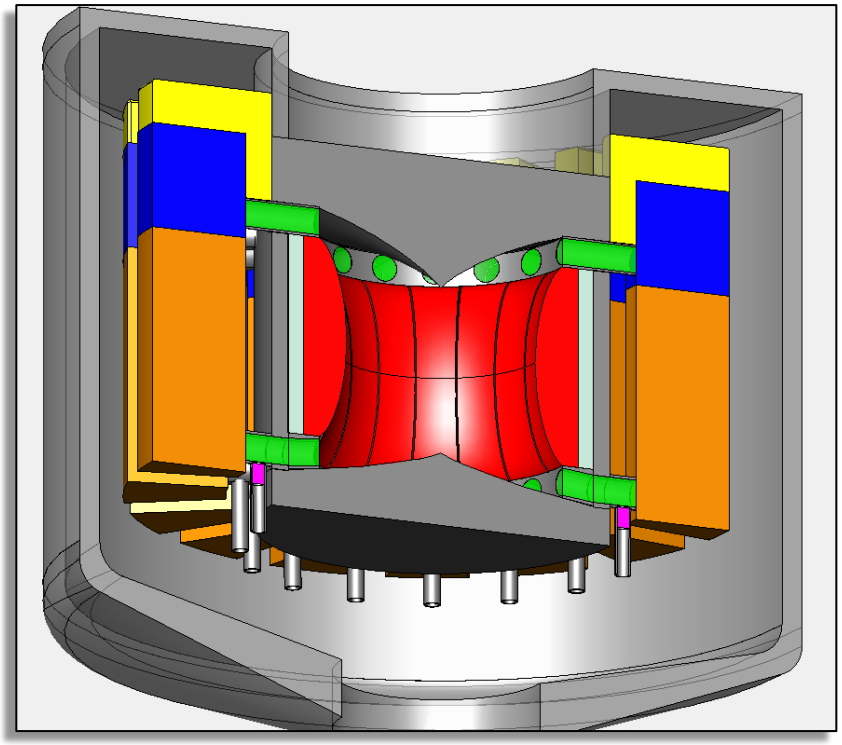

Molten Salt Fast Reactor (MSFR)

Fuel Salt Draining System = Shutdown System

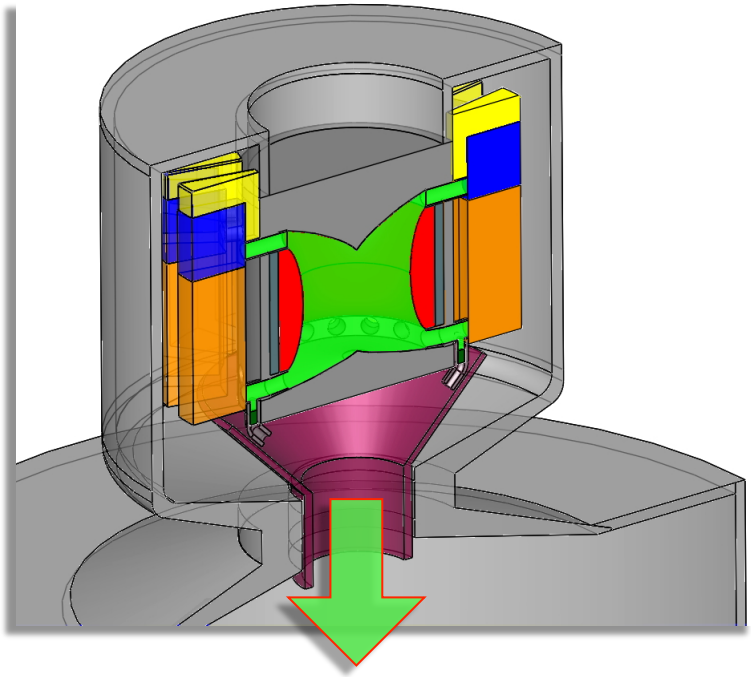

- Safety and emergency shutdown is based on draining in tank with a non-critical configuration.
- Need to demonstrate that it relies on physically sounded mechanisms:
  - Safety vanes reliability (molten salt plug, ..)
  - Molten salt conditions during draining (Flow, T, risk of solidification..)

Critical point : having a detailed understanding of the phenomena taking place in a high temperature molten salt flaw including thermal exchanges with walls

Work proposed in WP3 of the Samofar European project

Safety Assessment of the Molten Salt Fast Reactor
SAMOFAR

Salt at WAlls Thermal excHanges: SWATH

In the frame of the European SAMOFAR Project, dedicated work to improve the understanding of the fundamental T&H phenomena of molten salts is being carried-out in WP3. SWATH activities includes both experiments and numerical developments

Numerical Developments

Salt models

- Turbulence
- Phase change
- Heat radiation
- Internal heat

Experimental Developments

Test Facility

- Flow control
- Salt handling

Test Section

- Phenomena
- Instrumentation

1) Meaningful comparison only if the phenomenon effect is larger than the model and experiment uncertainties and systematic errors
2) The conception of the experimental sections needs prior numerical simulations steps before exact dimensioning

Numerical Simulation Work

Most of the model development is the subject of the thesis of Mauricio Tano (2015-2018, dir. P. Rubiolo)

Mail goals:

1. Identifying the physical phenomena governing the thermal-hydraulics and structural behavior of the molten salt in the Molten Salt Fast Reactor (MSFR)

2. Conception and design of the experiences of SWATH experiments for validating by numerical calculation the physical models proposed for the molten salt.

3. Integration of the physical behavior measured in SWATH experiments in the multi-physics model of the reactor.

SWATH : Experiment Working Principles

- ✓ Experiments with Flinak
- ✓ Discontinuous working principle (no pump)
- ✓ Salt flow is initiated and controlled by the pressure difference in the tanks
- ✓ Two different SWATH components: the facility and the experimental section
- ✓ The experimental section included the test components and the instrumentation located inside the glove box

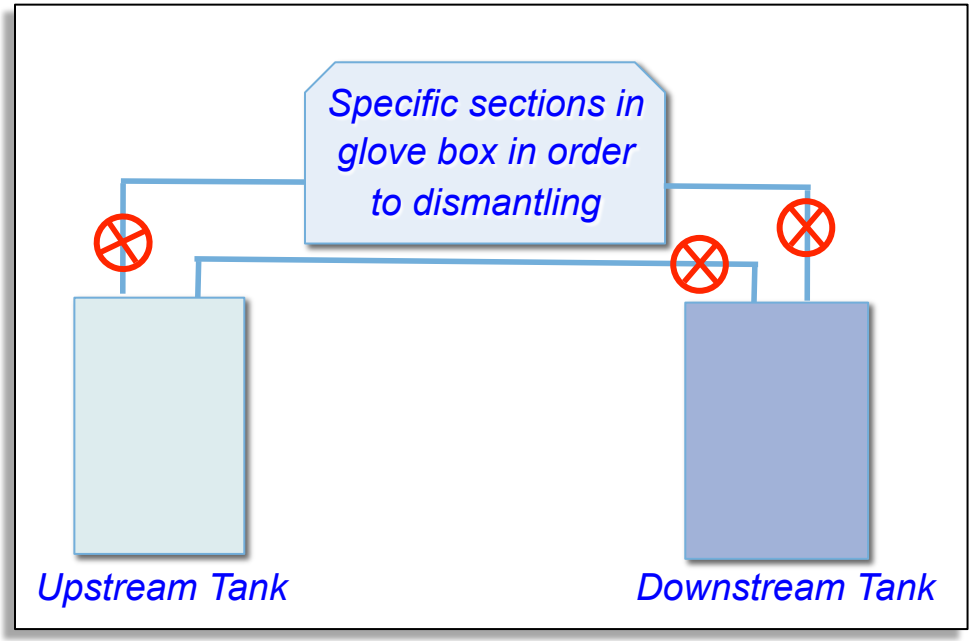

- ✓ The experimental facility will be designed to provide sufficient flow duration to obtain both a well hydraulic and thermal established flow inside the test component
- ✓ Possibility of study the dynamics effects during the flow establishment phase

The experimental salt set up (SWATH-S) is supported by work on water mock-up (SWATH-W) and is based on the technical know-how acquired during the FFFER loop (see the other presentation)

SWATH Similitude with the Reactor Salt Flow

$$Pr = \frac{\mu C_p}{\lambda}$$

Re can be adjusted based on the flow velocity and hydraulic

Pr based on intrinsic liquid properties in function of the temperature

- **<u>Heat convection transfer (Prandtl number) :</u>**
  The most likely normal and accidental Prandtl ranges are covered by Flinak and HITEC

LiF-ThF4	
T °C	Prandtl
600	21,0
700	16,0
800	12,8
900	10,6
1000	9,1
1100	7,9
1200	7,1
1300	6,4
1100	7,9
1200	7,1
1300	6,4

Flinak	
T °C	Prandtl
475	24,0
500	20,0
525	16,8
550	14,3
575	12,3
600	10,7
625	9,3
650	8,2
675	7,2
700	6,5

Hitec	
T °C	Prandtl
175	27,6
200	22,8
225	18,8
250	15,4
275	12,6
300	10,4
325	8,6
350	7,1
375	6,1

Hitec is the salt used by the other partner Samofar from italy in their natural convection loop

SWATH Experimental Sections

Two types of experiments are planned to verify

The correct representation of state changes and effects of the presence of solidified salt on wall

The correct representation of the heat exchanges and pressure drop

Localized crystallization of salt

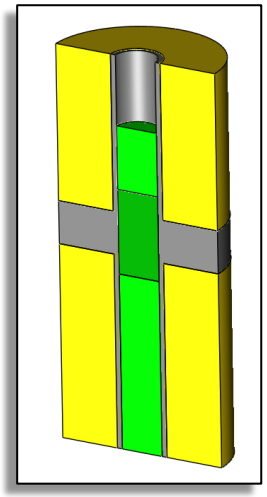

Flow on « cold » walls

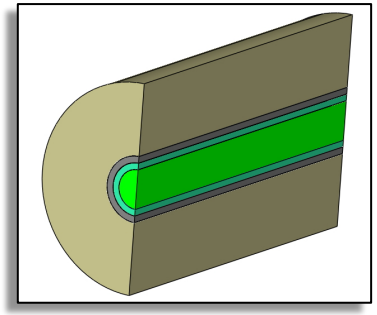

Flow in « open » channel

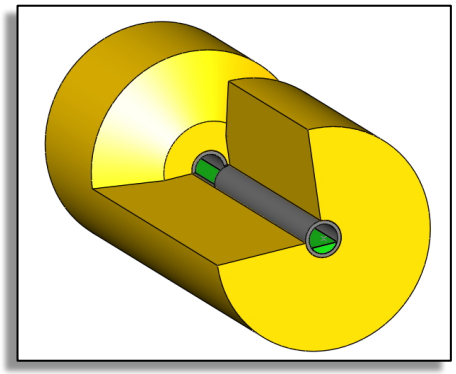

Flow with specific pressure drop

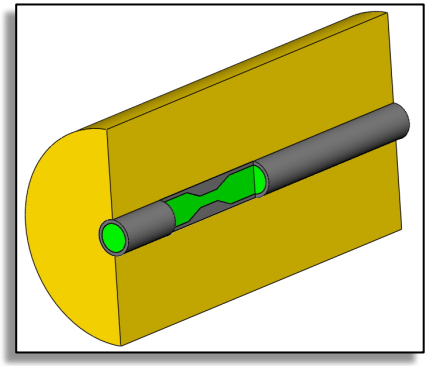

Sections are currently being designed

SWATH-W (Water)

- Perform hydraulic tests at isothermal low temperature conditions with directly observable fluid fields
- Experimental measures: PIV, P, Q, SWATH tanks level
  - **Measure velocity field (PIV) in test section during established or transient flow**
  - **Measure SWATH hydraulic output parameters (P and Q)**
- Expected results:
  - **Evaluate CFD hydraulic model accuracy at steady/transient flow conditions**
  - **Identify/evaluate systemic errors (flow circuit, steady, control, etc.)**

Reduction of SWATH-S Development Time and Risks

✓Identify/resolve in advance potential issues

✓Define SWATH-S test measurement protocol

✓Speeding-up hydraulic test developments

→ **Preparation of the flow control system and of the hydraulic instrumentation**

SWATH-S (FliNak)

- Perform the experiments with the test section including thermal effects and phase change
- Experimental measures: P, T, Q, SWATH tanks level
  - **Pressure drop in the test section**
  - **Temperature variations at several locations in the test section**
  - **Flow rate and pressure at various point in the circuit**
- Expected results:
  - **Evaluate CFD thermal hydraulic models accuracy at steady/transient flow conditions, including melting and solidification**
  - **Study the phenomena existing in the cold plug concept**
  - **Provide modeling recommendation**

SWATH-S Platform Design

Schedule:
Start : sept 2015 => end : July 2016

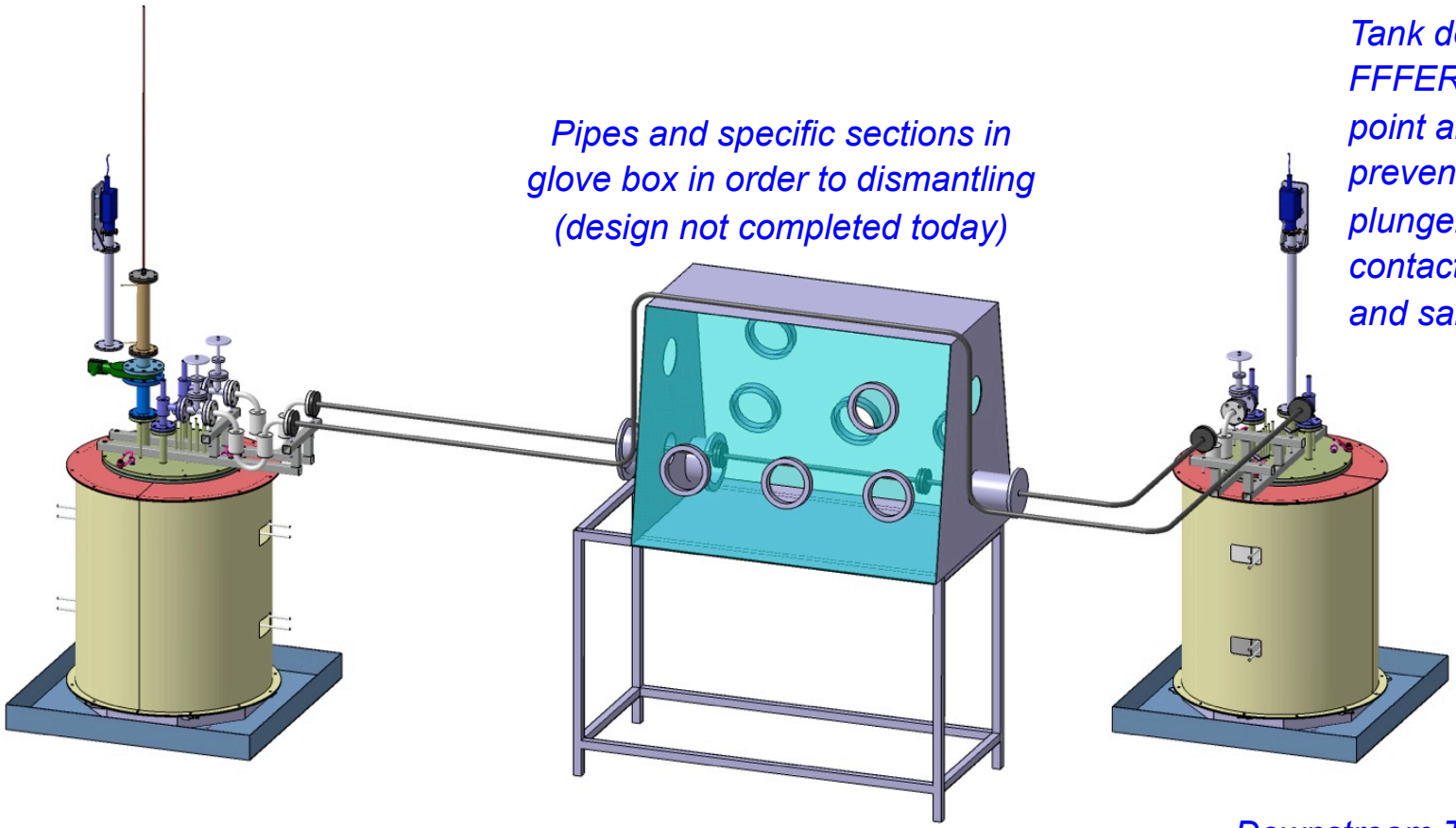

Pipes and specific sections in glove box in order to dismantling (design not completed today)

Tank design drawn from FFFER tank but several point are modified to prevent plugging of the plunger in cold area and contact between welding and salt.

Upstream Tank

Downstream Tank

Today

- Wall, floor
- Electricity (30 Kw)
- Gas, Industrial water
- Air circulation
- Air conditioning

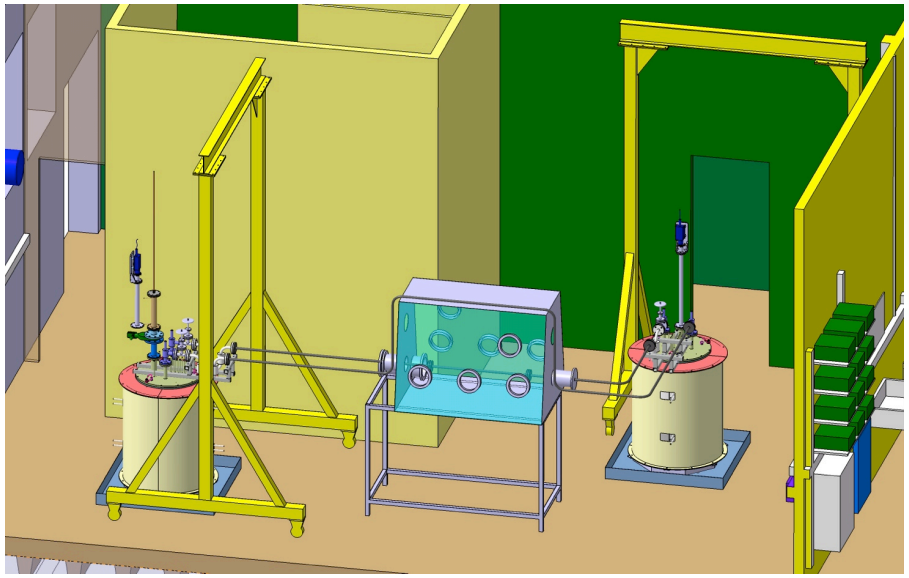

Experimental Room

Control Room

The installation has to be ready for test in August 2017

SWATH-W Platform Design

Schedule: being finished

- Develop fluid control
- Pressure drop experimentation
- Experimental section testing (visualization)
- Component testing
- Possibility of comparison of experiments with pump driven flow and tank driven flow

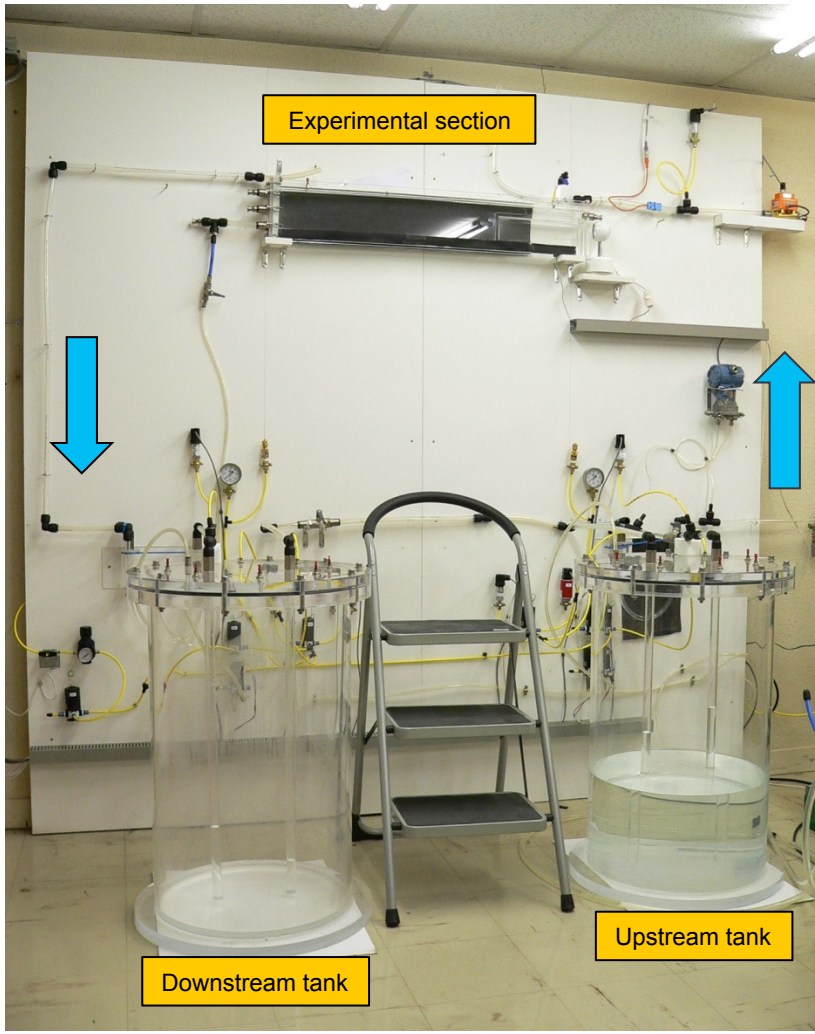

Example of Hydraulic Experiment: The Backstep

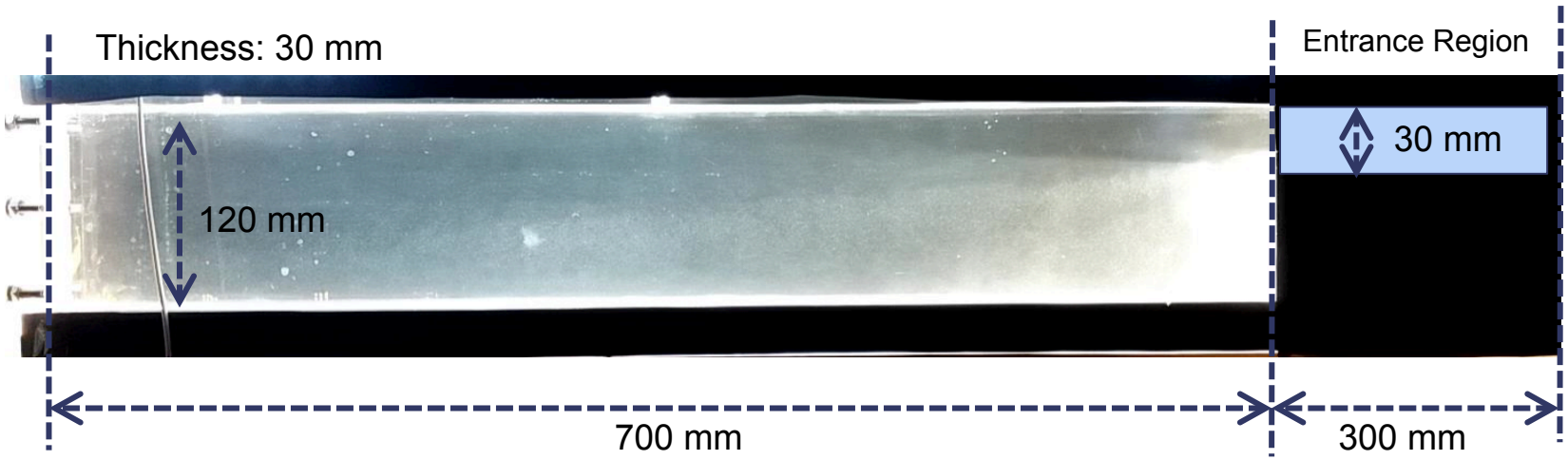

Objectives:

1. Investigate if SWATH facility allows for accurate comparison against detailed hydraulic models and test the overall methodology (flow control, transient versus steady, PIV, etc.)
2. Compare various common RANS models: study the turbulent kinetic energy

Example: Realizable k-Epsilon Model

PIV

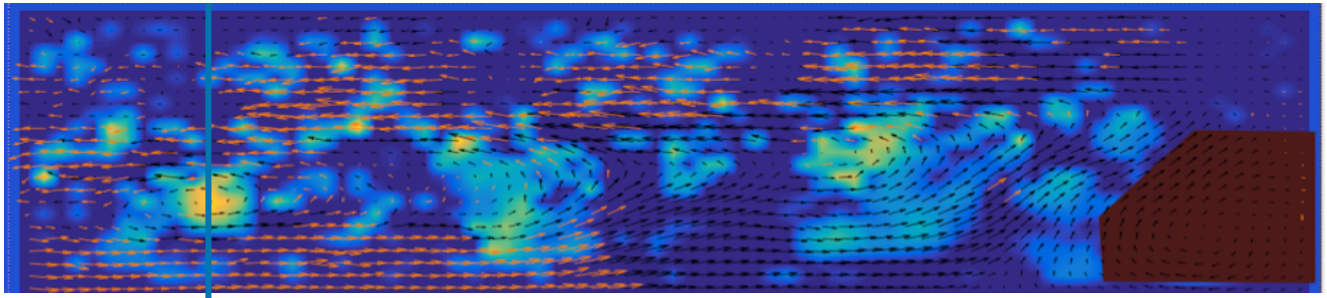
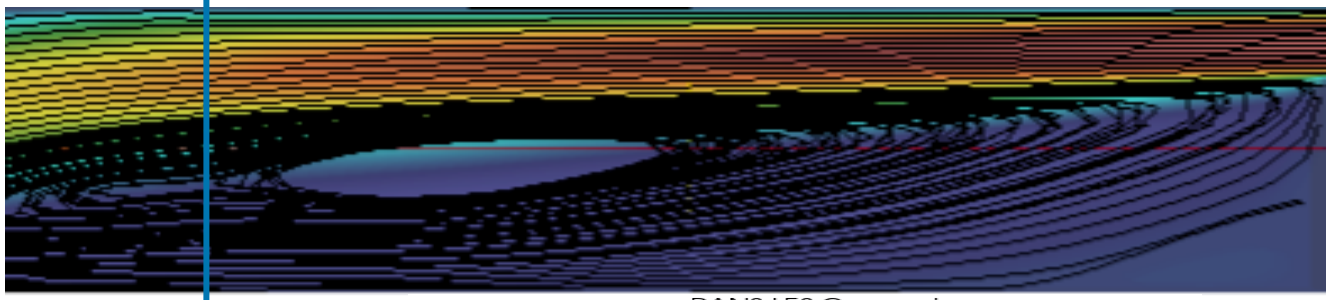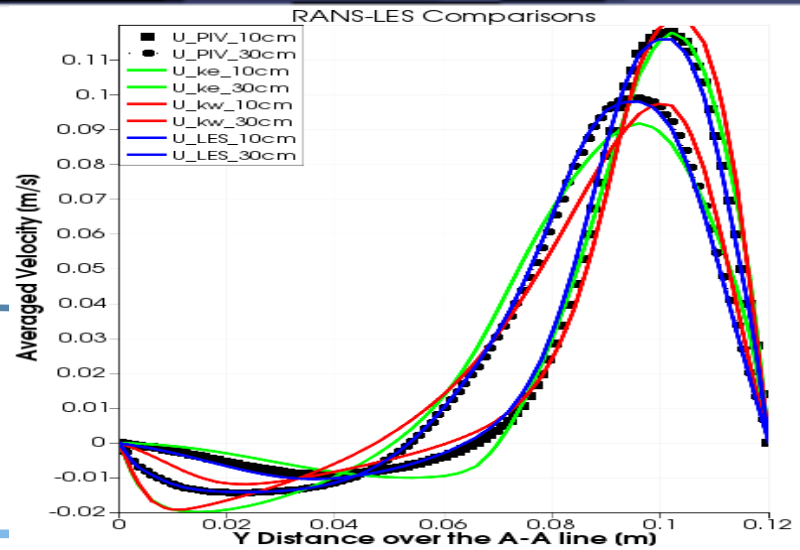
Realizable-KE