NEUP Integrated Research Project -2, Workshop 2: FHR Code Benchmarking

MATT Session 3: Salt Chemistry

April 14, 2016

Facilitators:
Francesco Carotti (PhD Student UW Madison)
Tom Chrobak (MS Student UW Madison)
Ruchi Gakhar (Postdoc UW Madison)

Session 3 Goals

Goals

- Update on chemistry and electrochemistry experimental work being carried out at UW Madison.
- Discuss scientific and engineering research questions applicable to the FHR design.
- How to benchmark Salt Chemistry quality for experimental research.
- Be safety work:
    - Updates on procedures
    - How to establish flibe exposure limits and safety?

Summary of Discussion Topics

- List of discussion topics
  - Electrochemistry projects at UW
    - Dynamic probe redox measurements
    - Reduction of flibe (Be-addition)
    - Oxidation via addition of fluoride impurities
    - Reduction of flibe (Electropurification)
    - Static Ni/NiF2 Reference Electrode
    - Tritium transport with electrochemistry
    - Solubility, Diffusion Coefficients
  - Spectroscopy
  - Be Safety

Redox Measurement background

Combination of Dynamic and Static Techniques

First Phase

- Beryllium is plated from the salt onto an electrode (1)

Second Phase

- Voltage is cut, beryllium allowed to redissolve back into the salt
- Be|BeF_2 reference voltage is formed from dissolution reaction (2)

$$V_{Redox} = V_{(Be|BeF2)} - V_{Measured}$$

- As plated products deplete, voltage relaxes back to zero (3)

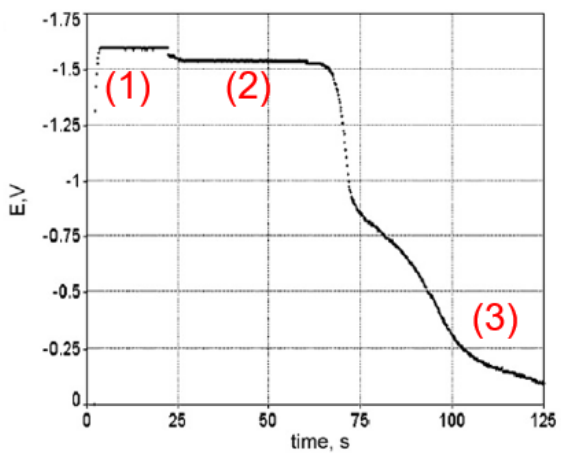

(Afonichkin, 2009)

- O_2 and Moisture controlled glovebox
- Radiant heater, PID used to maintain 500±0.5° C
- HP 3616A Power Supply

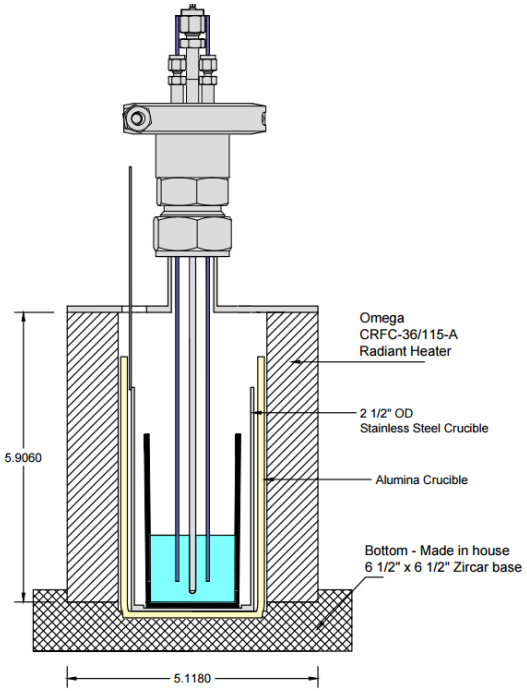

Redox Probe Measurement Process

Phase I: Plating

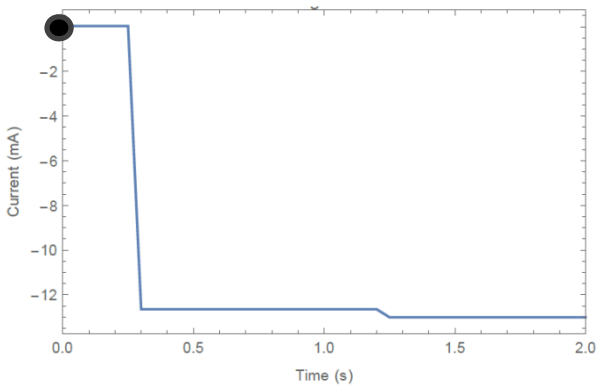

Phase II: Voltage Measurement

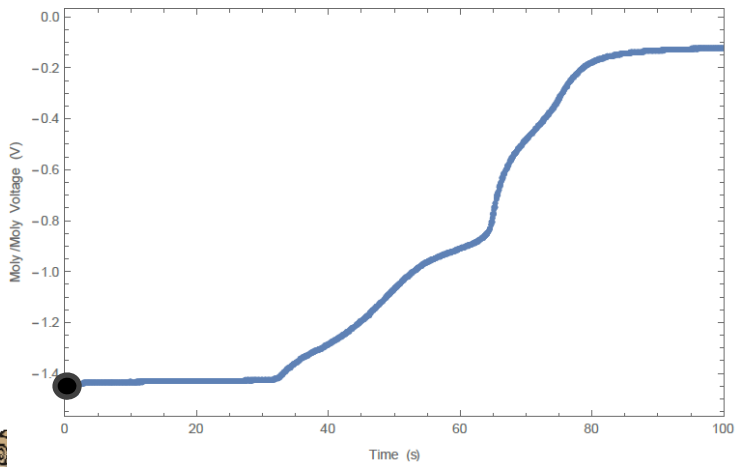

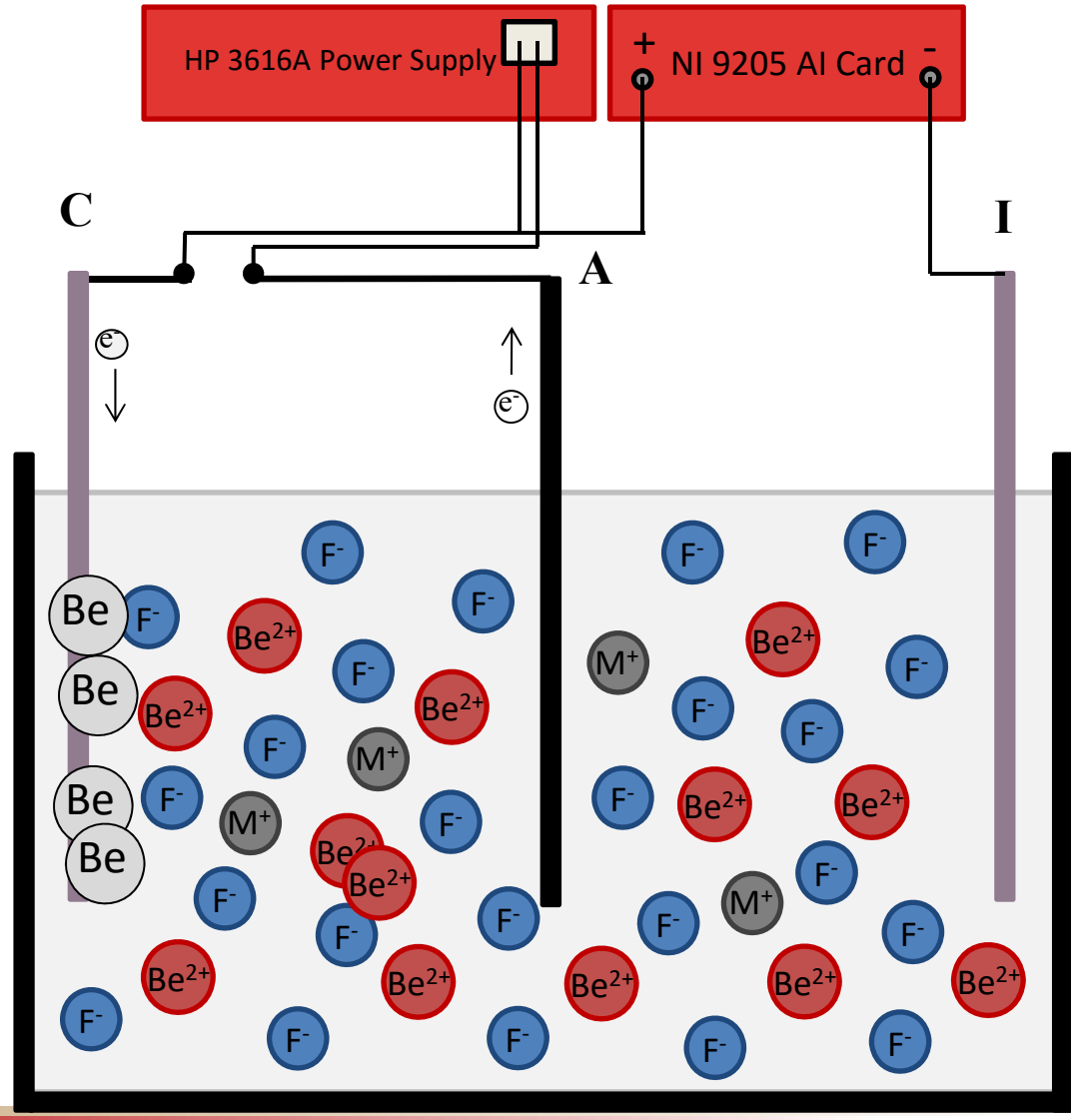

Current Work : UW-Made FLiBe characterization

- Previously, 38kg of FLiBe produced at UW

- 400 grams FLiBe prepared for corrosion experiment
  1) Reduction through addition of Be metal
     - » Reduces fluorides to metals » ($NiF_2 + Be = BeF_2 + Ni$)
     - » Final redox condition is reducing at -1.41V
  2) Filtration of metallic impurities
     - » Redox condition remains reducing at -1.45V

- Next Steps:
  1) NAA/ICP-OES to compare purity levels through steps
  2) Electro-purification experiment – apply (-) potential to high surface area working electrode and investigate coating and salt chemistry

- How can we measure impurity concentrations?
- Are different methods comparable and/or reproducible?

Reduction of FLiBe

- FLiBe can be reduced past HF with 2 methods that have been demonstrated experimentally
  1. Addition of metallic Be
  2. Electro-purification

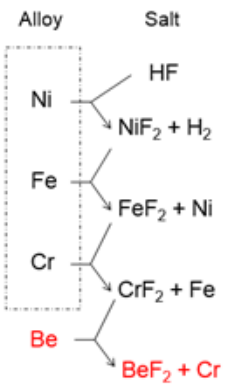

1) Starting with purified FLiBe (-1.7V), Be metal (flakes) added and dissolved at 600C for 24 hrs. This reduces redox potential to (-1.4V).

- Verified using redox probe.
- How can we quantify the required amount of Be to properly reduce FLiBe?
  - » Flakes vs. Rod

2) Apply low potential current against working electrode (Ni/Mo plate) and counter electrode (Glassy Carbon rod, Ir wire?)

- 2.5V for 1 second is standard for plateau measurement
- 1V for 100 seconds good starting point?
- Anodic reactions can be a concern (CF4 production). Remedies?

Electro-purification Experiment

- **Electro-purification experiment using Solartron 1287A potentiostat**
  - Apply current (-) to Ni cathode and attempt to plate out impurity metals
  - Early attempts with Ni coil proved plausible with some issues
  - Coating on Ni coil was dissolved with DI water and particles were leftover.

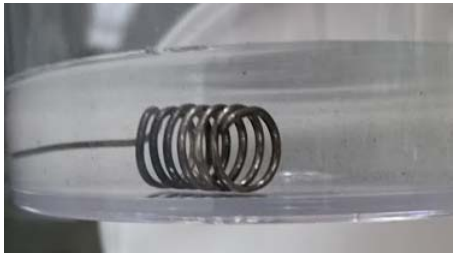

Surface of end of coil (deepest in the salt)

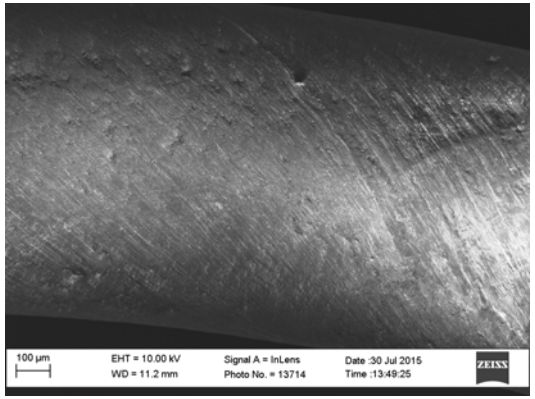

- **Use of Ni plate for more accurate surface analysis?**
- **Can perform XRD/EDS on these particles?**

Oxidation tests of FLiBe

- Starting with purified FLiBe (-1.7V), Be metal is added and dissolved. This reduces redox potential to (-1.4V).
- Then, small incremental additions of metallic fluorides are added, and redox potential is measured after dissolution.
- Additions of CrF_2 do not change the redox potential
  - CrF_2 is most stable impurity fluoride
  - Subsequent redox scans remove impurities and reduce salt
- How can we tell if we have CrF_2 dissolved in the FLiBe?

$$E_{cell} = \frac{RT}{nF} ln([M_{alloy}F_x]) + constant$$

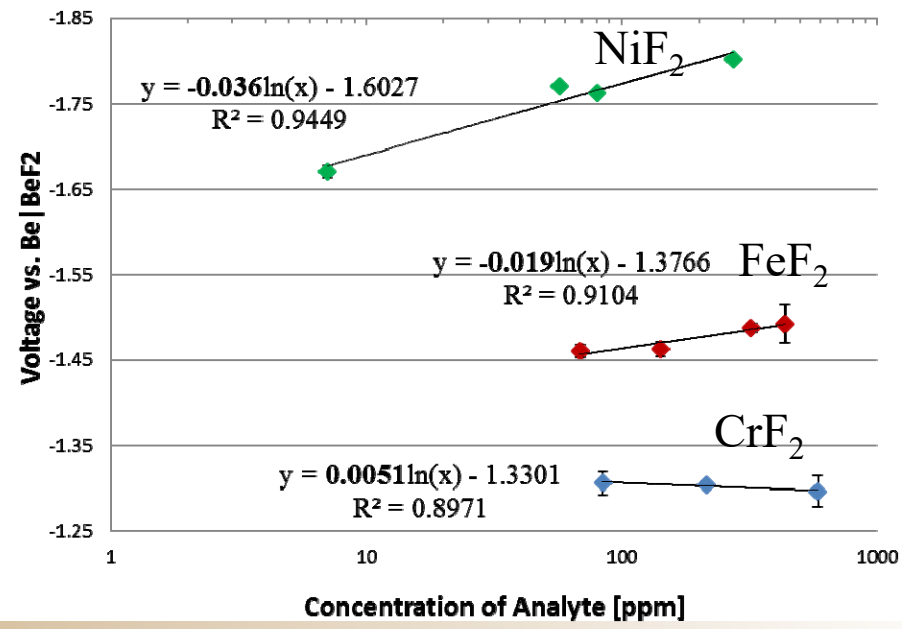

Electrochemistry in Heat an Mass group

NEUP grant started October 2015

Characterize Tritium transport in liquid fluoride salts (flinak and flibe) and graphite systems using electrochemistry techniques.

- Experimentally measure H_2/HF diffusivity and solubility in the salt and in different kinds of graphite forcing an EMF between two electrodes.
- Initial steps - challenges:
  - *Building and testing of a Static Reference electrode for flibe salt.*
  - *Methods to introduce controlled quantities of Hydrogen in the salt*

LABORATORY SETUP

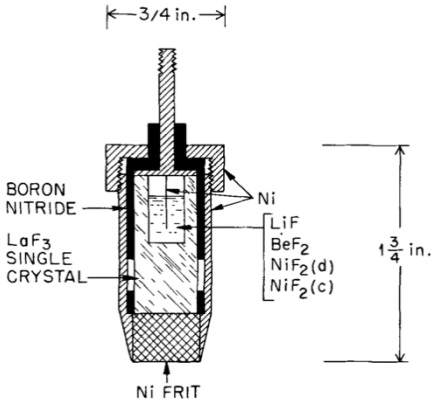

FLIBE REFERENCE ELECTRODE [BRONSTEIN]

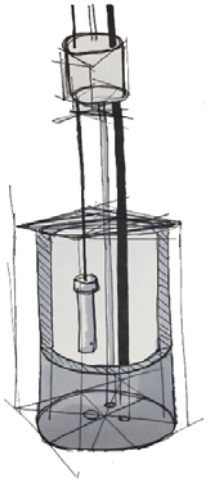

ELECTROCHEMICAL CELL

- **Can electrochemistry be used to study hydrogen Transport in salt/graphite systems? How can we introduce hydrogen in a salt electrochemical cell?**

Reference Electrode - Ni/NiF2 reference electrode

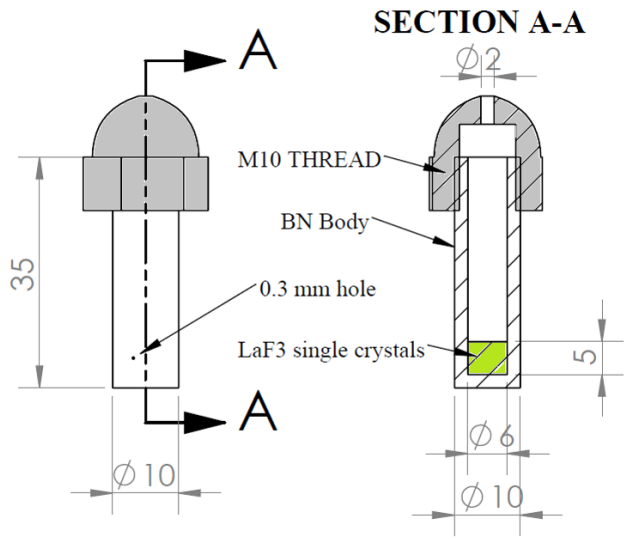

RE DRAWING. THE 6MM DIAMETER 5 MM HEIGHT LAF3CRYSTAL IS VISIBLE IN THE BOTTOM PART OF THE SECTION.

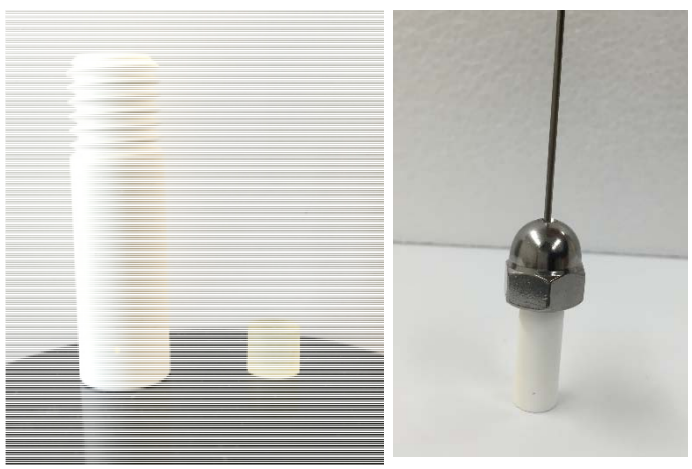

RE PICTURE. THE N201 IS SLID FROM THE TOP CIRCULAR OPENING

- BORON NITRIDE BODY provides electrical insulation and is inert in fluoride melts.
- LANTHANUM FLUORIDE single crystal: ion conductive membrane connected through a hole to the main salt batch.
- Electrode charged with ~1g of Fluoride Salt SATURATED with NiF2.
- HIGH PURITY Ni WIRE inserted into the electrode.

- Reference reaction – Nernst Equation:

$$E_e = E_e^0 + \frac{2.3RT}{nF} * \log \frac{a_{Ni^{2+}}}{a_{Ni(m)}}$$

Preliminary Testing in flinak - Cyclic Voltammetry

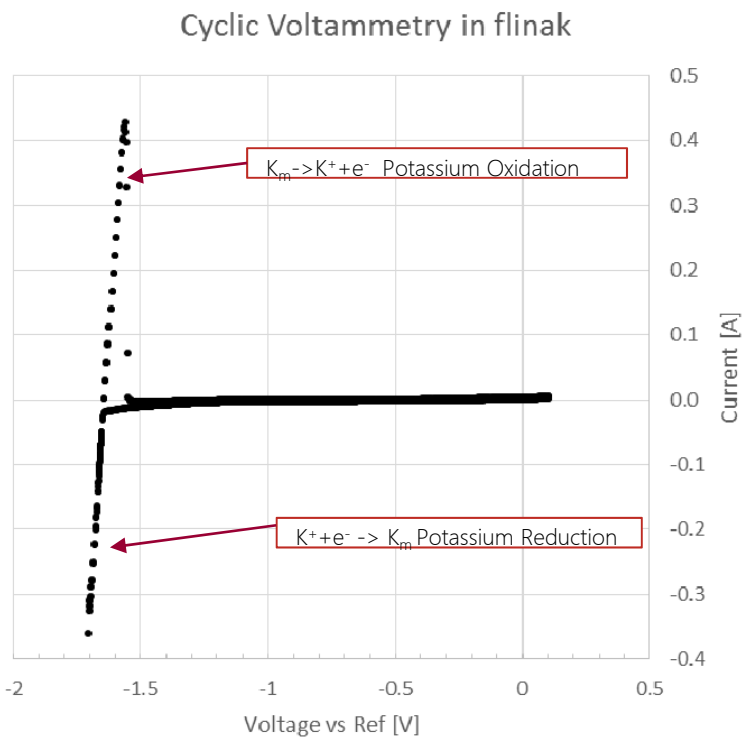

WE: Ni201 RE: Ni/NiF2 CE: GC Salt: Flinak@600C
Scan rate: 100 mV/s

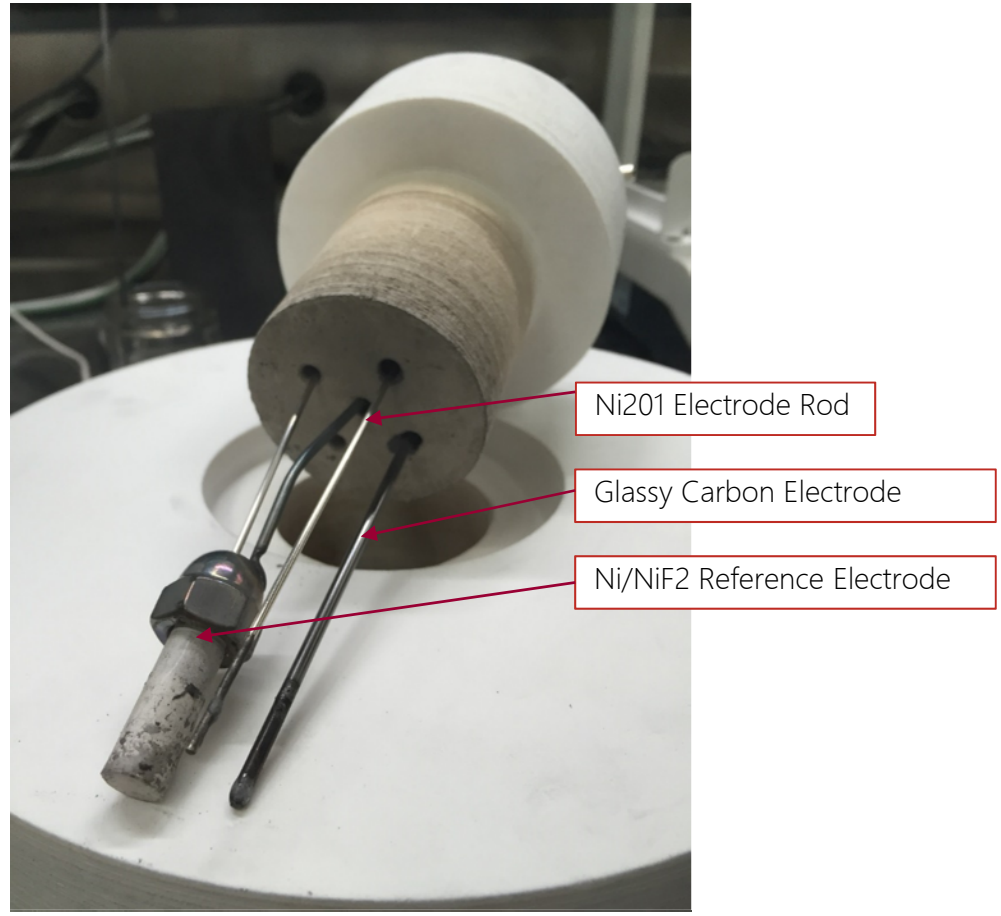

- Scan negative potentials to find **reduction peak** of the first alkali metal (less stable) that form the salt. (in flibe Be, in flinak K).
- Several CV scans measured stable reduction peak over time -> stable RE potential readings.

Stability and Reversibility of the electrode

- Which are the best methods to test a RE stability and reversibility?

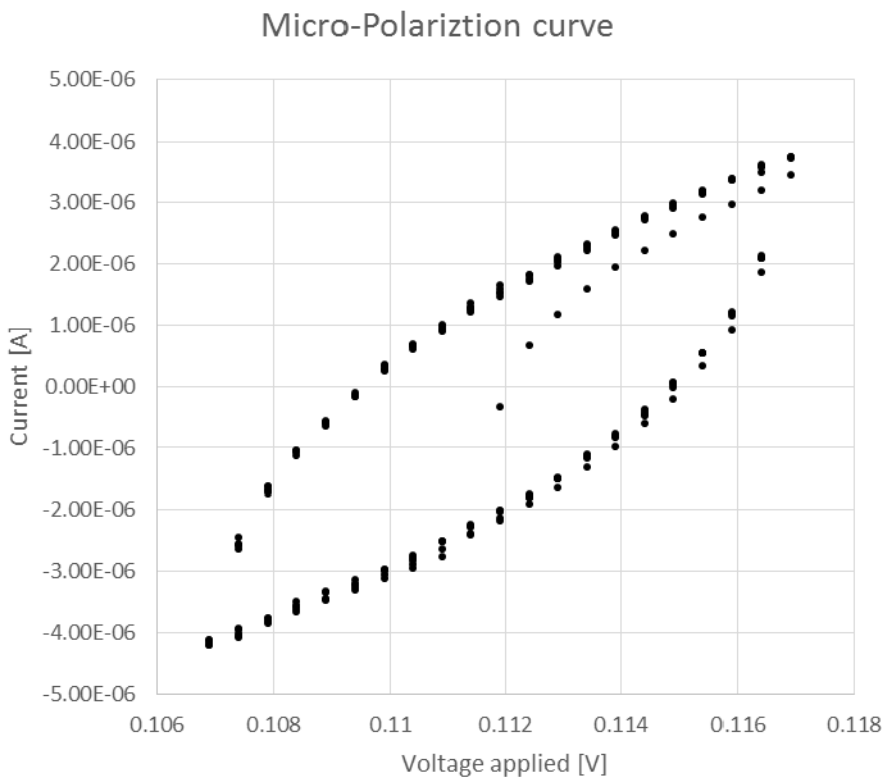

WE:
Ni/NiF2
RE & CE:
Ni201.
Salt:
Flinak
@600C
Scan Rate:
1 mV/s

- Characterizes the electrode ability to maintain stable potential when current is flowing through it.

Chemistry Redox Benchmarking

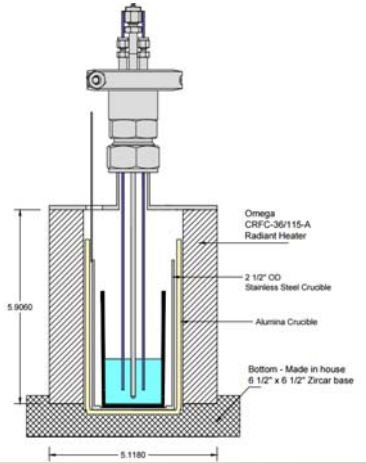

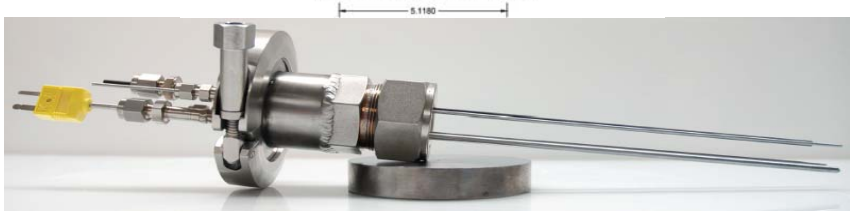

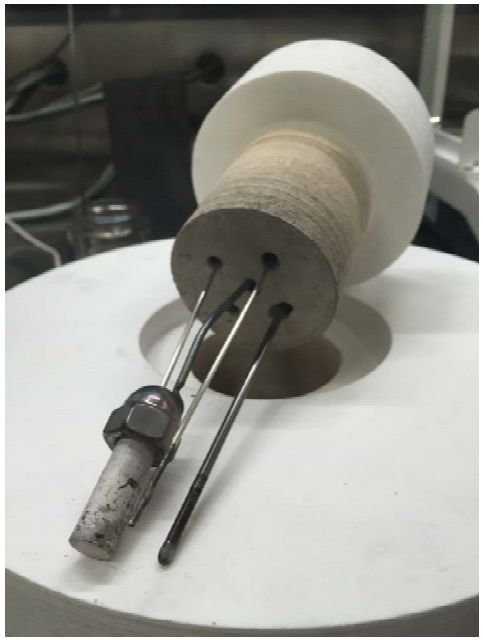

- What measurements and techniques should be used to <u>benchmark for the chemical quality</u> of flibe used for experiments? How can we set quality standards?
- What experiments should be done <u>to compare the 2 probes measurements and results</u>?

Diffusion - Solubilities

- Well established electrochemistry techniques can be employed to study:
  - Diffusion coefficients
  - Solubilities
  - Reactions equilibrium potentials

- What of these data can be useful in the FHR design?
- What are the tolerances for dissolved fluoride impurities?

Spectroscopy of Flibe/Fluoride Salts

Goals, motivations and plans

- Optical characterization of Flibe/other fluoride salts
- Understand the structure of ions in the molten state - dimers or trimers ?
- Analysis of spectra of complex ions at different compositions of Flibe
- Corrosion products analysis
- Short range or long range order of ionic species in the salt

High Temperature NMR Spectroscopy of Fluoride Salts

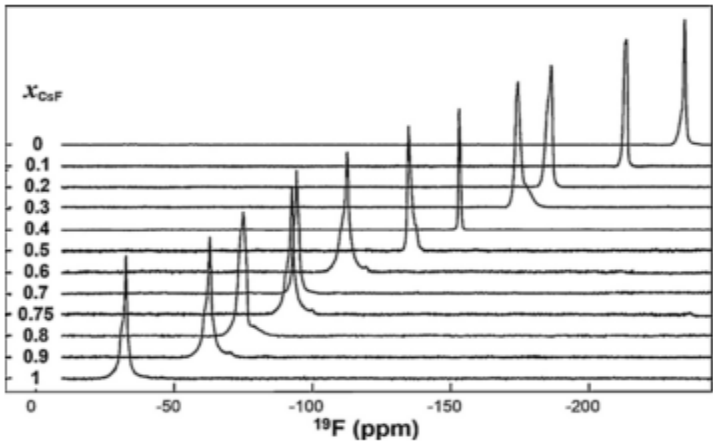

NMR spectra of ^{19}F in molten CsF-NaF for molten fraction of CsF (x_{CsF})

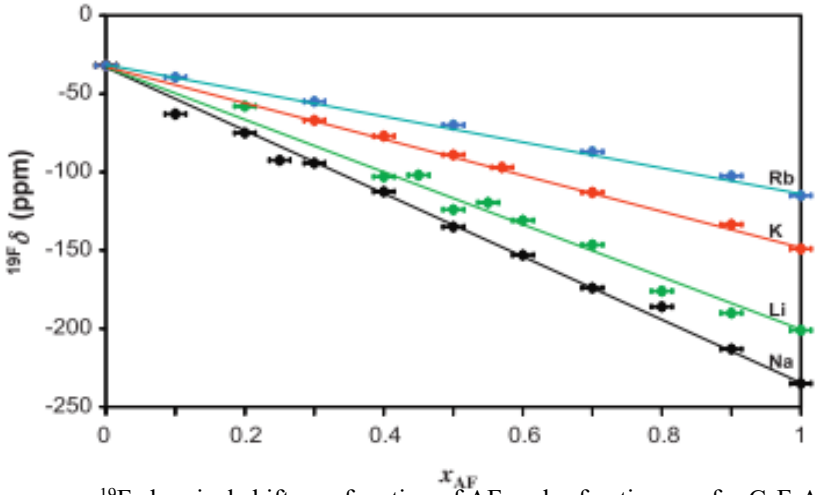

^{19}F chemical shift as a function of AF molar fraction x_{AF} for CsF-AF mixtures whwere A = Li, K, Na and Rb)

- ^{19}F and ^{133}Cs chemical shifts has been measured in various molten fluoride salt systems (CsF-AF, where A = Li, Na, K and Rb).
- Facility – HT NMR at CEMHTI – CNRS in Orleans, France
- Important information – Coordination number, residence time of F in coordination shell of alkali/metal fluorides, dynamic local heterogeneities of ions in the salt

- **Is it worth studying the chemistry of Flibe using NMR ?**
- **If so, where can we carry out this study ? Collaboration with group in France ?**

Ref- A.-L. Rollet and C. Bessada. Journal of Fluorine Chemistry 180 (2015) 40-44.

Optical spectroscopy of Fluoride salts

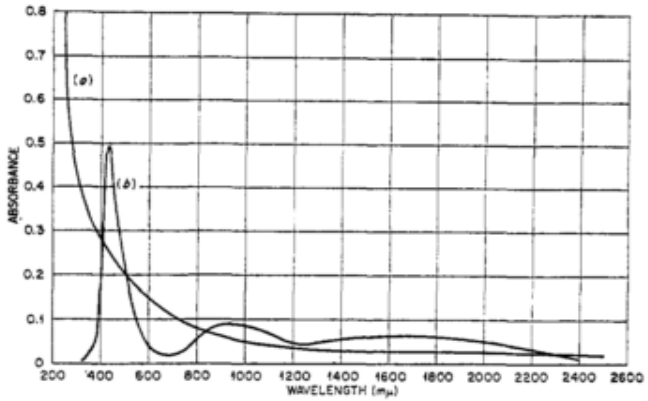

(a) Absorbance of diamond-windowed cell containing Flibe at 550°C and (b) absorbance of dilute solution of NiF_2 in Flibe at 550°C

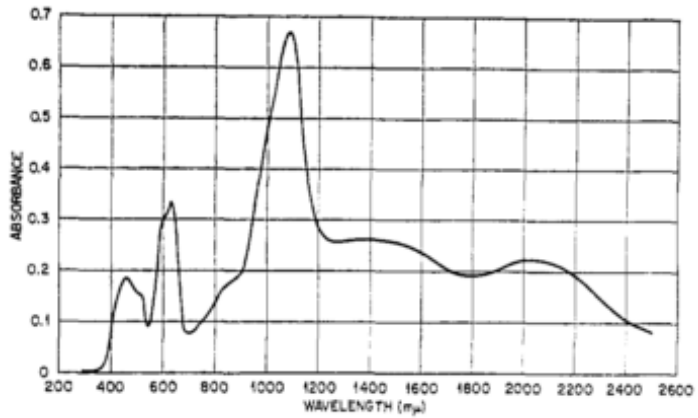

Spectra of dilute solution UF_4 in molten LiF-BeF_2 (66-34 mol%) at 550°C

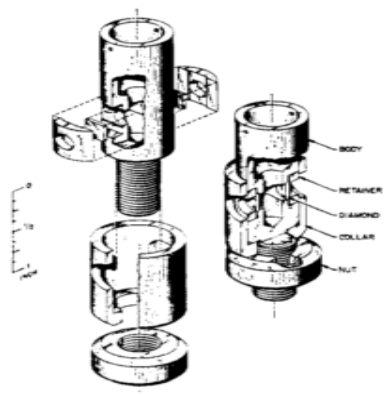

What should be the preferred optical range to analyze the corrosion products in Flibe ?

Ref – Toth et al. Diamond –windowed cell for spectrophotometry of molten fluoride salts. Analytical Chemistry 41(4) 1969

Raman spectroscopy of Fluoride Salts

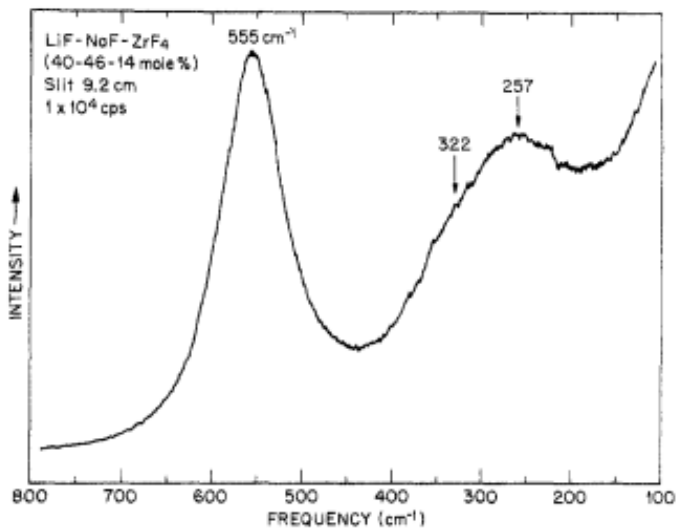

Raman spectra of molten LiF-NaF-ZrF_4 (40-46-14 mol%) at 650°C

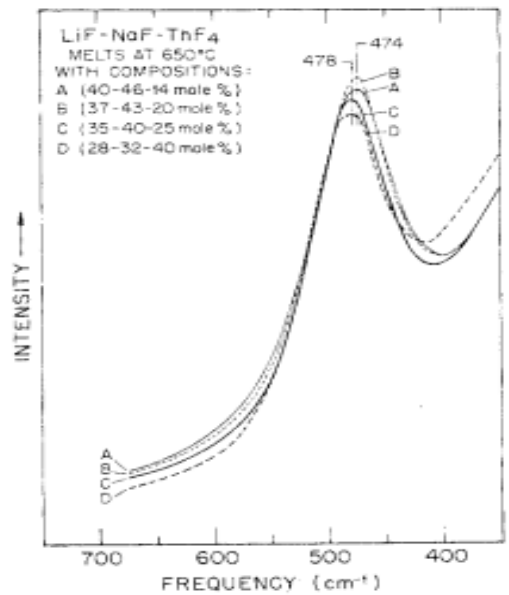

Raman spectra of LiF-NaF-ThF_4 melts at 650°C at various compositions

The occurrence of a variety of discrete complex ions formed in the fluoride salt melts has been inferred by Raman spectroscopy

Can Raman spectroscopy be used to analyze complex ions formed in Flibe melt ?

To understand the corrosion mechanism by analysis of Flibe-containment interface ?

Ref – Toth et al. J. Physical Chemistry Analytical Chemistry 77(22) 1973

Ref – Toth et al. J. Physical Chemistry Analytical Chemistry 77(11) 1973

Proposed setup - I

- **Use of Fiber Optic cables**

Price range - $25,000 – $30,000

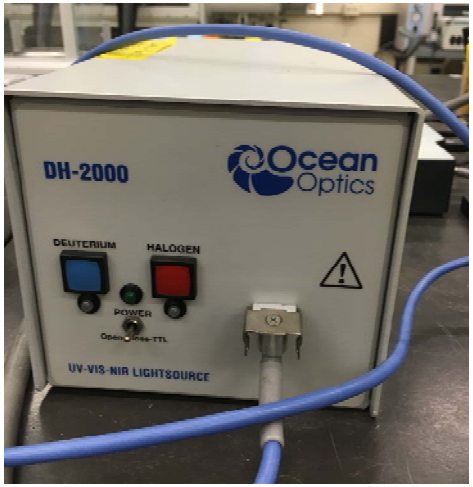

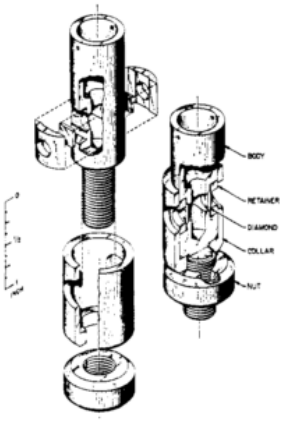

Ref – Toth et al. Diamond –windowed cell for spectrophotometry of molten fluoride salts. Analytical Chemistry 41(4) 1969
Ref – Dr. Mike Simpson lab, university of Utah, Salt Lake City

Proposed setup - II

- **Use of high temperature accessory**

Price range - $14,000 – $15,000

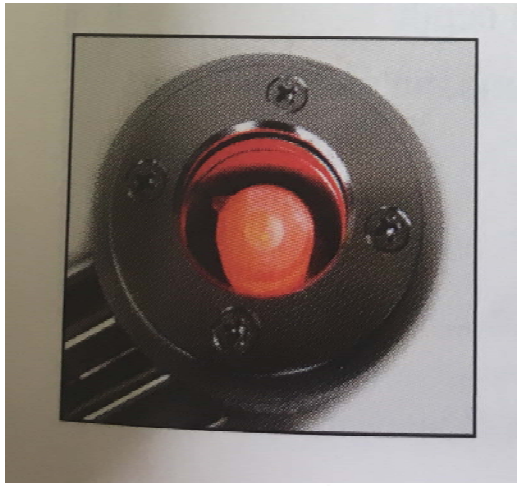

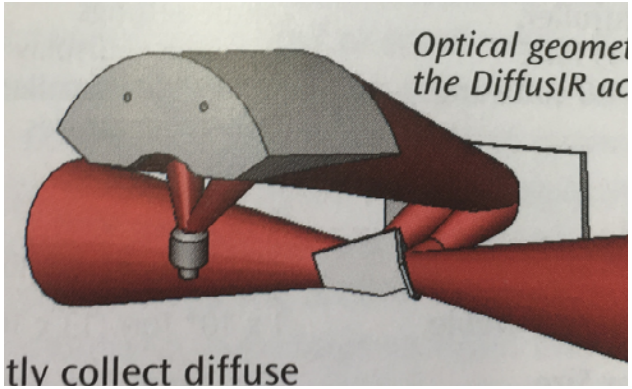

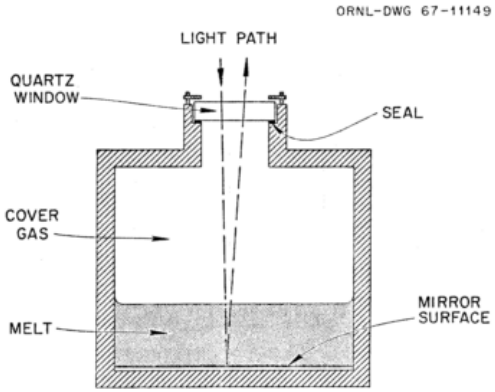

Fig. 2. Fluoride Reflection Cell Concept.

Which method is more feasible for broad range optical analysis ?
Other suggestions ?

Ref – Pike Instruments Technology, Madison

Spectroscopy – Discussion Questions

- What optical light range can be used to study impurity?
- Can we use the same spectroscopy setup to study the vapor phase of Flibe ?

Beryllium Safety

- Beryllium poses a respiratory threat as a carcinogen, and can also increase beryllium sensitivity after prolonged exposure
- UW researchers are given entry and exit tests for beryllium exposure, as well as periodic tests while employed
  - Annual breathing test
  - Biannual blood test
  - Optional chest x-ray
- UW researchers conduct beryllium monitoring via air sampling and swipe testing periodically in lab spaces
  - DOE action level of 0.2 $\mu g/m^3$ for air sampling
  - OSHA limit is 2.0 $\mu g/m^3$ average for air sampling
  - DOE action level is 3 $\mu g/cm^2$ for swipe testing
  - Sampling done during high exposure risk activities as well as periodically

Beryllium Safety

- Personal Protective Equipment:
  - Respirator on-hand for emergency uses and unexpected releases
  - Chemical goggles
  - Nitrile gloves
  - Lab coats
- Beryllium disposal policy is currently being examined
  - Beryllium supply such as dissolved FLiBe or solid FLiBe must be labeled as such and given complete chemical disposal
  - Beryllium-contaminated material such as wipes or gloves are separated from normal trash, to be disposed of specially
- Generally speaking, best practices are used to avoid beryllium contamination from spreading outside of designated fume hood and glove box spaces.

- What kind of data should we collect to help establish flibe exposure limits and flibe safety?

Wrap-Up Discussion

1. How do we Benchmark Salt Quality?

2. What diffusion coefficient, reduction/oxidation potentials and impacts on redox potential, solubilities data are useful for FHR design?

3. What can we learn with spectroscopy techniques?

4. What should be our next steps in the chemistry/electrochemistry moving forward?

References

[1] C. G. Kontoyannis, 'Pyrolytic Boron Nitride Coated Graphite as a Container of Reference Electrodes for Molten Fluorides', Electrochim. Acta, vol. 40, no. 15, pp. 2547–2551, (1995).

[2] H. R. Bronstein and D. L. Manning, 'Lanthanum Trifluoride as a Membrane in Reference Electrode for Use in Certain Molten Fluorides', J. Electrochem. Soc., vol. 119, no. 2, pp. 125–128, (1972).

[3] H. W. Jenkins, G. Mamantov, et al., 'EMF Measurements on the Nickel-Nickel II couple in Molten Fluorides', Eletroanalytical Chem. Interfacial Electrochem., vol. 19, no. April 1967, pp. 385–389, (1968).

[4] V. K. Afonichkin, A. L. Bovet, et al., 'Dynamic reference electrode for investigation of fluoride melts containing beryllium difluoride', *J. Fluor. Chem.*, vol. 130, pp. 83–88, (2009).

[5] A.-L. Rollet and C. Bessada. High Temperature NMR of CsF- AF melts (A = Li, Na, K and Rb). Journal of Fluorine Chemistry 180 (2015) 40-44.

[6] Toth et al. Diamond –windowed cell for spectrophotometry of molten fluoride salts. Analytical Chemistry 41(4) 1969

[7] Toth et al. J. Physical Chemistry Raman spectra of Zirconium (IV) fluoride melts 77(22) 1973

[8] Toth et al. J. Physical Chemistry Raman spectra of Thorium (IV) fluoride melts 77(11) 1973