NEUP Integrated Research Project Workshop 2:
FHR Benchmarking and VVUQ

MATT Session 1: Tritium Management Options (excluding carbon) and System Modeling

April 14, 2016

Facilitators: Floren Rubio (UNM) and Nisarg Patel (UW)

Contributors: Stephen Lam (MIT) and John Stempien (MIT/INL)

Bryan Wallace (UNM)

Objectives

- Present and discuss candidate tritium management methods (non-graphite)
- Present and discuss the current state of tritium modeling
- Answer the following questions

Questions and Goals

- What are the current activities on tritium management options? (excluding absorption on carbon) Which ones look the most promising and have we overlooked any possible methods?
  - Ultrasonically enhanced inert gas sparging
  - Tritium getters
- What are the current activities and capabilities for tritium permeation barriers and where can we go from here?
  - Double walled heat exchangers
  - Tritium Barriers
- What are the current and future activities on system-level tritium modeling?
- What multi-physics coupling is needed?

Tritium Modeling in FHR

Figure 1: TRIDENT Model Overview

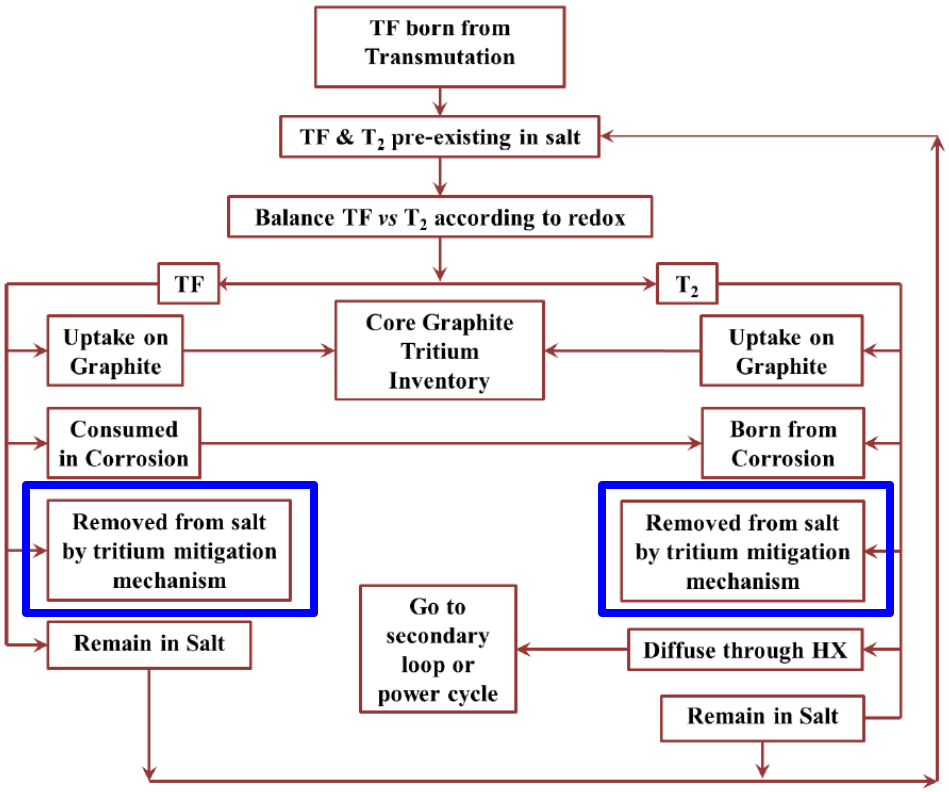

*"J. Stempien, "A Model of Tritium Transport and Corrosion in Salt-Cooled Reactors," Cambridge, 2015."

TRIDENT

Tritium Diffusion EvolutioN and Transport

Time dependent tritium in FHR model developed at MIT*:

- Tritium generation in core
- TF and T_2 Speciation (Redox)
- In-core graphite Up-take
- Corrosion consumption & generation
- Diffusion in coolant, vessels, heat exchangers, reflectors
- **Mitigation mechanisms**
- Tritium release to environment

Mechanisms and Release Rates

Tritium Capture Evaluation

- Without mitigation, release to environment peak at **2410 Ci/EFPD**
- Three mitigation mechanisms were evaluated in TRIDENT

1. Stripping Column

- 10 stage counter current column with 20,000 L/hr STP stripping gas
- Release rate with column: **436 Ci/EFPD**

2. Permeation Window

- Shell with permeation tubes (Nickel) with 2x heat exchanger area
- Release rate with window: **800 Ci/EFPD**

3 . Carbon Absorber Bed

- 1.2(R)x3.85(H)m bed nuclear grade graphite ISO-88 with 1 regen/30 days
- Release rate with bed: **600 Ci/EFPD**

Opens up the need to compare methods of tritium mitigation

Ultrasonic Enhanced Inert Gas Sparging

- Inert gas sparging was investigated for the MSRE for tritium and fission product removal.
- Enhancing this process with ultrasonics may prove to be a viable method of tritium capture and release mitigation.
- Initial studies look promising.

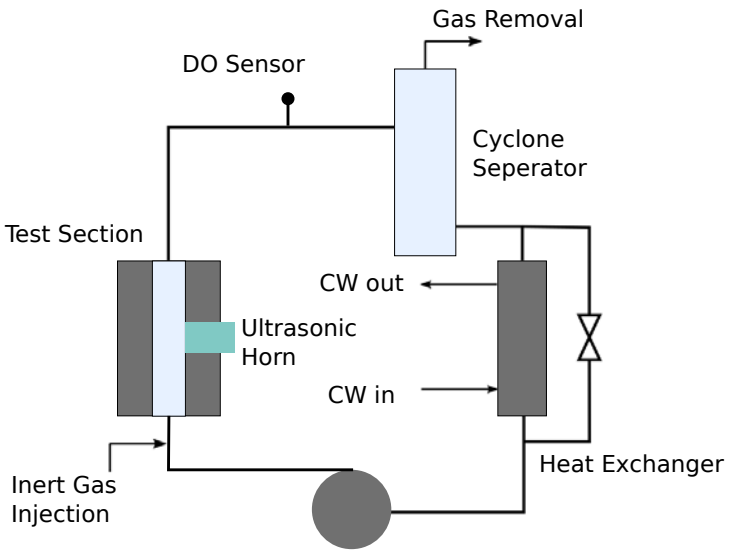

Left: Schematic of the prototype sparging mass transfer experiment
Right: The ultrasonic process cell close up

Preliminary Degassing Results

Replace with video before presenting

Narrow Channel Test Section

Experimental Conditions	
Sonic Field	20 kHz
Intensity	275 W/cm^2 continuous
Flow Rate	1.25 GPM
Initial DO	8.0 mg/L
Final DO	3.0 mg/L

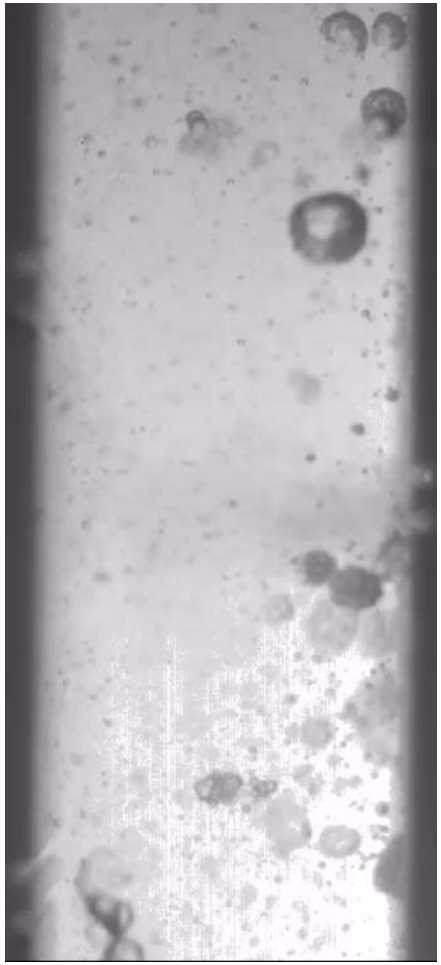

Bubbles no longer avoid near field and can start breaking up into smaller bubbles.

Preliminary Degassing Results

Result:

~70% reduction in time for the same DO reduction.

Experimental Conditions	
Sonic Field	20 kHz
Intensity	275 W/cm^2 continuous
Flow Rate	1.25 GPM
Initial DO	8.0 mg/L
Final DO	3.0 mg/L

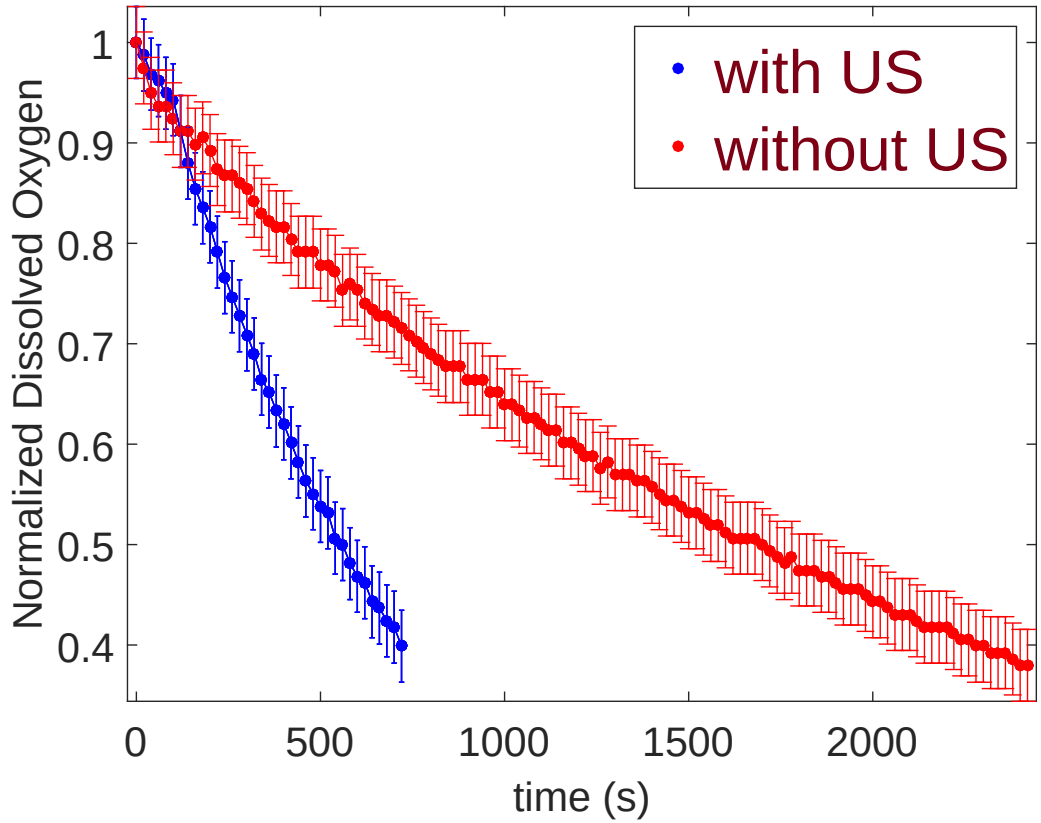

Next Steps and Challenges

Next Steps

- Different cell geometries
  - Ring Transducers
  - Indirect Sonication
- Scale up considerations

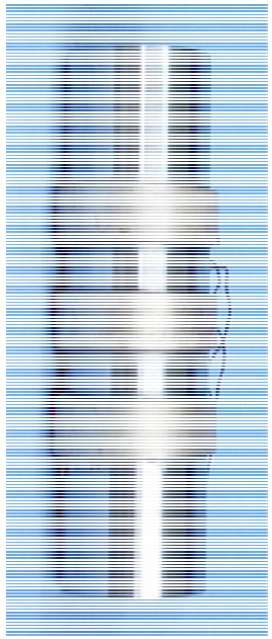

Challenges

- Materials challenges
  - Erosion
  - Salt Compatibility
  - Activation
- High Temperatures
- High Radiation Doses

Double-Wall Twisted-Tube Heat Exchangers

- Double-wall heat exchanger with twisted outer tubes
- Double-wall tubing allows for several options to suppress the permeation of tritium through heat exchanger walls.
- Surrogate fluid is Dowtherm A
- intermediate tube space fluid can be modified in order to support an, like a sweep gas or other form of coolant

From left to right, A: The heat transfer loop including the novel heat exchanger B: The dip type twisted tube heat exchanger C: The shell and tube heat exchangers. A view from the port shows the twisted tubes within the heat exchanger

Current Tritium Getter/Barrier Candidates

- Table 1 provides a preliminary set of options that could be used for the mitigation of tritium
- In a partnership with Los Alamos National Lab, UNM will perform preliminary studies to produce yttrium hydride and assess its thermal performance under conditions similar to those associated with the proposed FHR heat exchange system.

Name	Form
Al_2O_3, SiC	Coatings
Yttrium Hydride	Coating, Powder, Pebble Bed
Graphite	Pebble Bed
Helium, Helium/Hydrogen	Sweep Gas

Table 1: Some tritium mitigation options for a double wall heat exchanger

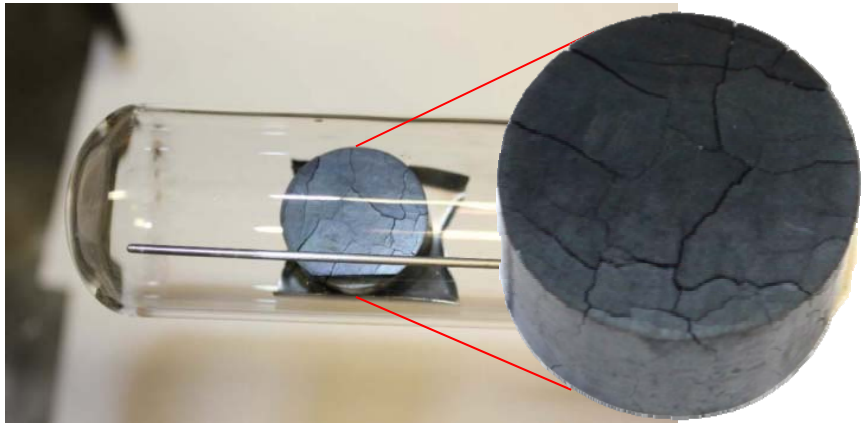

Picture 1: A sample of YH prepared at Los Alamos National Lab

Modeling Next Steps

1. **Data collection to understand hydrogen uptake mechanics**
   - **Absorption-Desorption kinetics (trapping, diffusion, etc.)**
   - **Behavior in high temperature exposure, cycling, irradiation**

2. **Modeling and technology qualification**
   - **Use new data to reduce model uncertainty**
   - **Improve predictive capability**

3. **TRIDENT coupling with existing thermal-hydraulics codes**

Experimental Next Steps

- **Continue experiments in ultrasonically enhanced inert gas sparging.**

- **Experiment and test getter technology**
  - **Thermal properties at FHR temperature**
  - **Capture effectiveness**

- **Investigate filler material in double walled heat exchangers**
  - **Sweep gas**
  - **Yttrium hydride**
  - **Barriers combined and/or getters**

Further discussion, Questions, or last minute comments