TMSR-SF1/TMSR-LF1 Thermal Hydraulic Design Progress

Chong Zhou

Content

- 10MW TMSR-SF1 TH design
  - Overview
  - TH design of the reactor
  - TH design of the upper reactor & upper silo
  - TH design of the lower silo & PRHR
- 2MW TMSR-LF1 TH design

TMSR-SF1 TH design overview

TH design objective

- Study the thermal hydraulic behavior of the reactor core and the coolant system, to define a reasonable set of reactor thermal hydraulic parameters
- Provide enough heat transfer capacity matching the fission thermal energy generation in the reactor core during normal operation
- Ensure effective passive residual heat removal after reactor shutdown, and ensure the reactor safety in accidents

TH design limits

- Fuel temperature design limits
  - Peak fuel temperature ≤ 1250℃ in operating condition I & II
  - Peak fuel temperature ≤ 1600℃ in operating condition III & IV
- Coolant temperature design limits
  - Peak coolant temperature ≤ temperature limits of the structure materials (704℃ for Hastelloy N)
  - Coolant temperature in reactor and coolant system ≥ salt melting point (465℃ for FLiBe)
- Core coolant flow rate design limits
  - Coolant flow rate in the core active zone ≥ 85% of reactor inlet coolant flow rate

TH design method and tools

- Steady state design and analysis
  - FLUENT/CFX
  - Porous media model for pebble-bed core simulation
- Transients and accidents safety analysis
  - Relap5
  - Code modification includes properties, heat transfer and pressure drop correlation for pebble-bed
- Heat transfer correlation
  - Wakao-Kaguei correlation: $Nu=2+1.1Re^{0.6}Pr^{1/3}$
- Pressure drop correlation
  - Ergun correlation : $\frac{\Delta P}{L} = 150\frac{(1-\varepsilon)^2}{\varepsilon^3}\frac{\mu}{d_p^2}U + 1.75\frac{(1-\varepsilon)}{\varepsilon^3}\frac{\rho}{d_p}U^2$

Schematic layout of TMSR-SF1

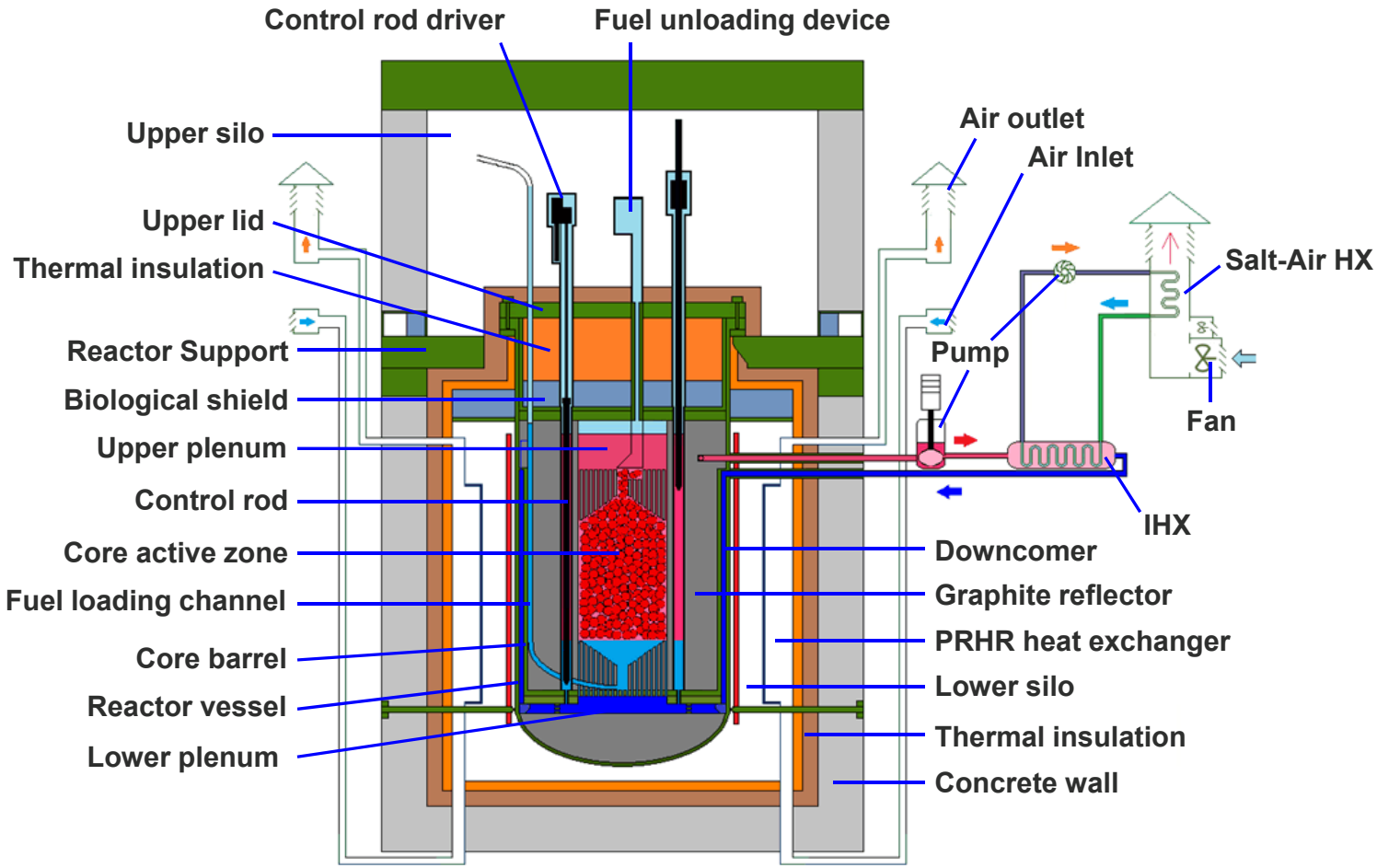

Key TH parameters of TMSR-SF1

Parameters	Value	Parameters	Value
Thermal Power (MW)	10	Coolant mass flow rate (kg/s)	84
Salt temperature at core inlet (℃)	600	Salt temperature at core outlet (℃)	650
Coolant in primary loop	$LiF\text{-}BeF_2$	Coolant in secondary loop	LiF-NaF-KF
Average coolant velocity in the core (m/s)	0.068	Average coolant Reynolds number	420
Coolant pressure drop from reactor inlet to outlet (kPa)	20	Coolant pressure drop in the core active zone (kPa)	2
Primary pump head (MPa)	0.3	Coolant velocity in primary pipes (m/s)	2.3
Thermal power of passive residual heat removal (kW)	200	System pressure (MPa)	0.5

Key structure parameters of TMSR-SF1 core

Parameters	Value
Fuel pebble diameter (mm)	60
Diameter/length of core cylindrical active zone (mm)	1350/1800
Diameter/length of core truncated cone active zone (mm)	1800 (bottom)/300 (top)/303
Fuel pebble packing manner	Random packing
Fuel pebble filling height (mm)	1600
Fuel pebble number	~12000
Fuel pebble packing factor	60%
Outside height/outer diameter of side reflector (mm)	3064/2850
Thickness of top/bottom/side reflector (mm)	632-329/632-329/750
Number/diameter of channels in top and bottom reflector (Diameter of central fuel loading/unloading channel)	288/40 (300)
Number/diameter of control rod channel in side reflector	16/162
Control rod diameter (mm)	110
Inner/outer diameter of control rod guide tube (mm)	126/146 (C/C composite)
Inner/outer diameter/height of core barrel (mm)	2866/ 2926/3064
Thickness of the bottom flow distribution plate of core barrel (mm)	80mm
Inner/outer diameter of the reactor vessel (mm)	2986mm/3050mm

TMSR-SF1 TH design of the reactor

Reactor vessel internals of TMSR-SF1

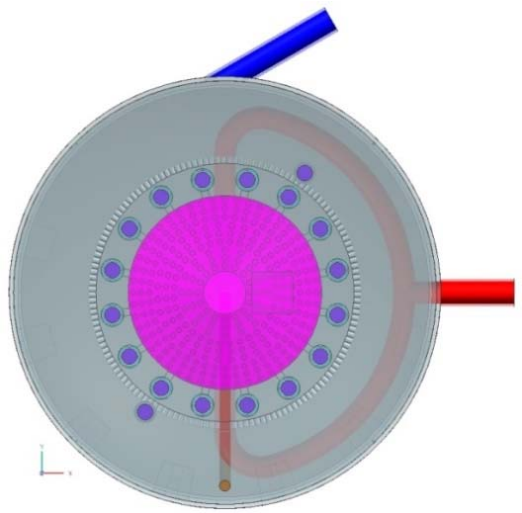

Reactor inlet/outlet

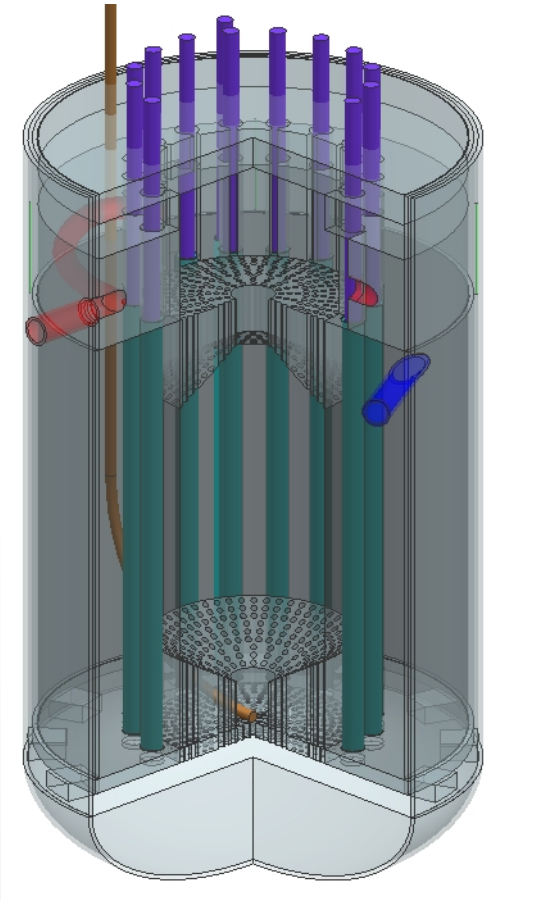

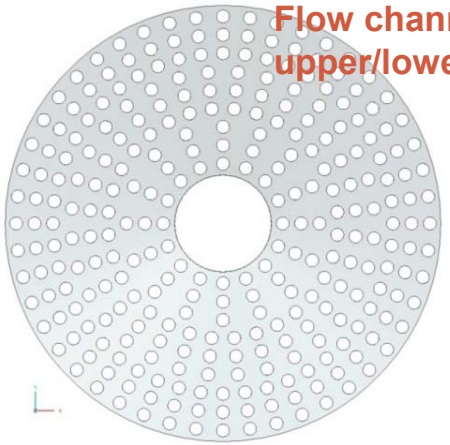

Flow channel in the upper/lower reflector

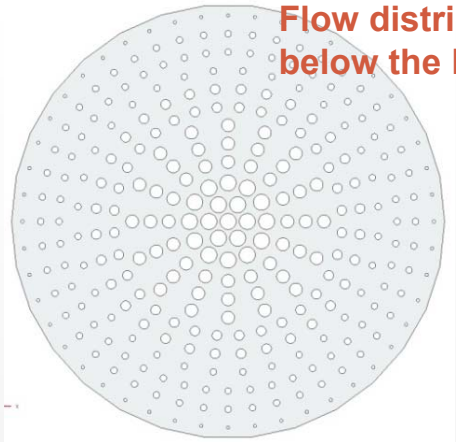

Flow distribution device below the lower reflector

Reactor coolant flow distribution

Reactor coolant streamline

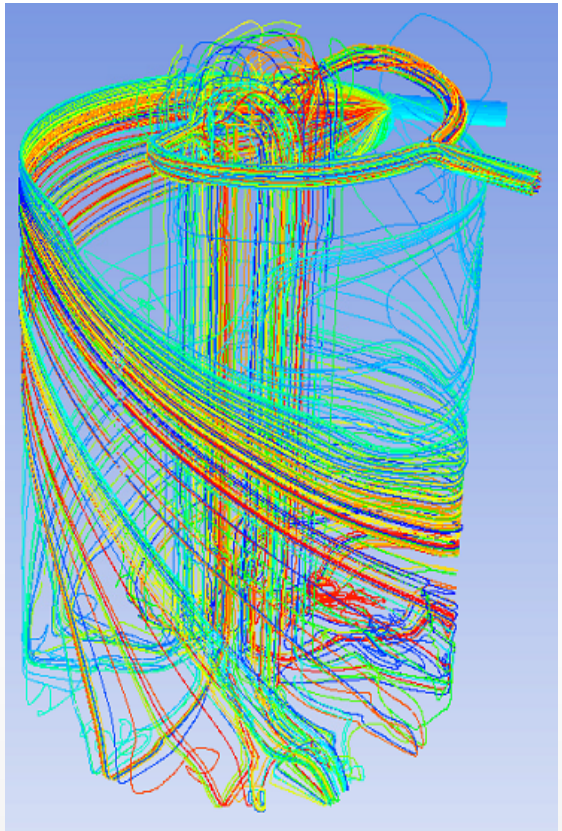

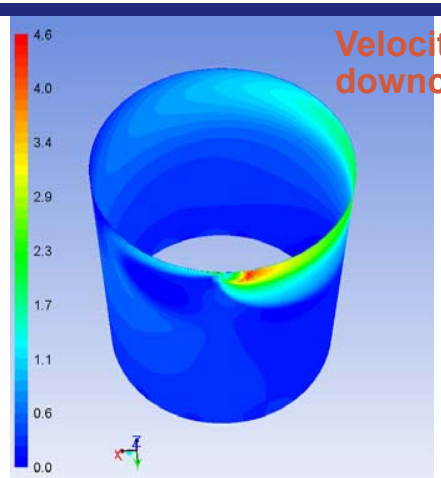

Velocity distribution in the downcomer

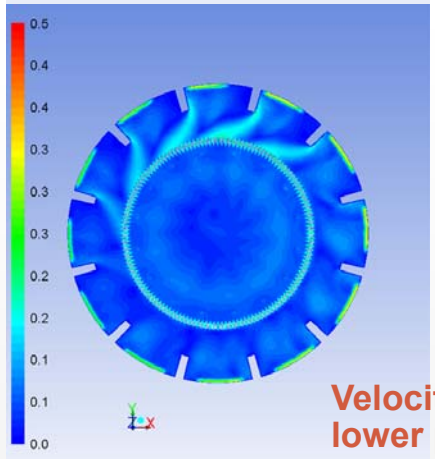

Velocity distribution in the lower plenum

Velocity distribution at fuel pebble bed bottom cross section

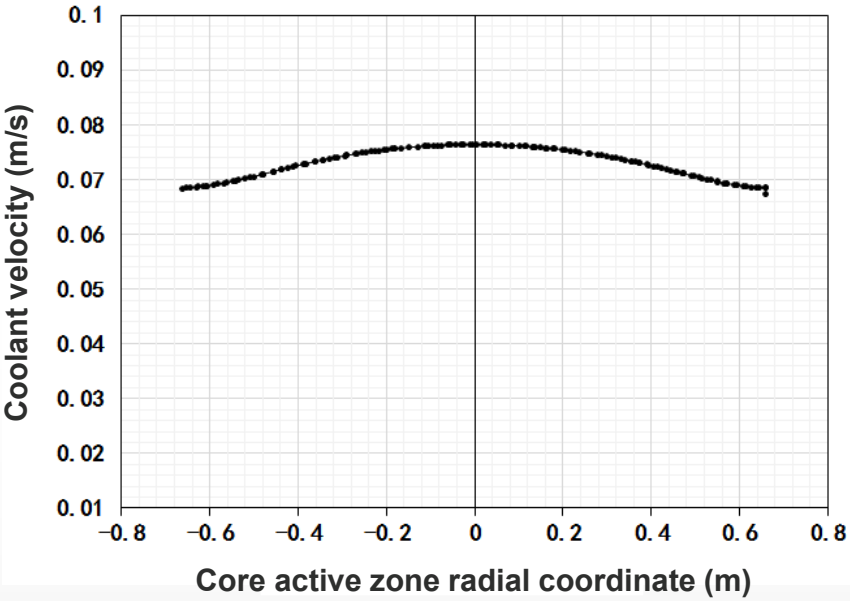

Flow diagram of TMSR-SF1

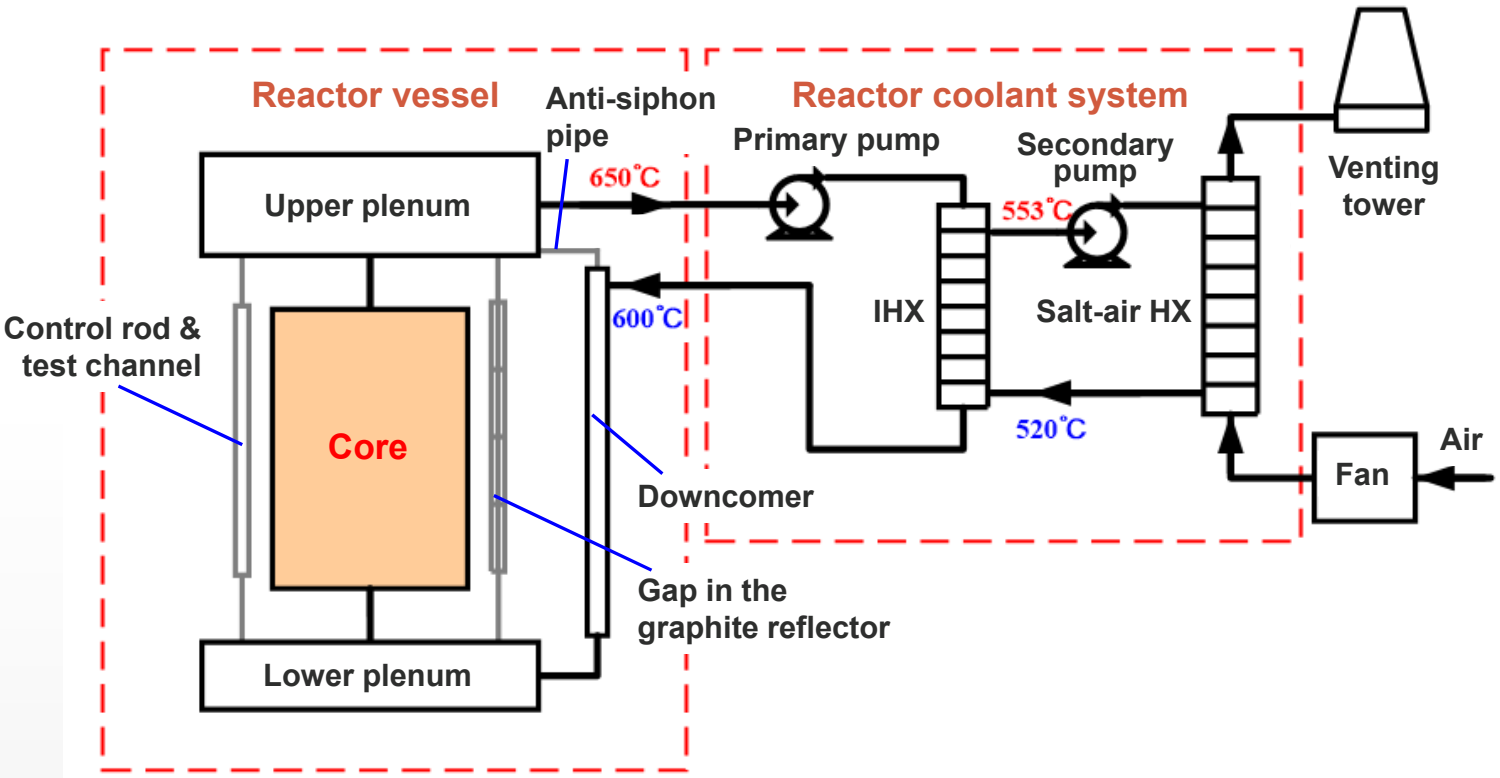

Reactor coolant flow distribution & pressure drops

Coolant flow paths in reactor vessel	Mass flow rate (kg/s)	Percentage (%)
Core active zone	74.5	89
Anti-siphon pipe at top of the downcomer (10mm x 4)	1.7	2
Gap at top sealing of the downcomer (≤1mm)	5.0	6
Control rod channel (10mm x 5mm x 16)	2.5	3
Total	83.7	100

Region	Pressure drop (kPa)
Core (from inlet to outlet)	19.3
Downcomer (from reactor vessel inlet to downcomer bottom)	4.6
Lower plenum (from downcomer bottom to lower reflector inlet)	0.2
Core (from lower reflector inlet to upper reflector outlet)	1.4
Upper plenum (from upper reflector outlet to upper plenum pipe inlet)	4.9
Upper plenum pipe (from upper plenum outlet to reactor vessel outlet)	8.2

Reactor core power and temperature distribution

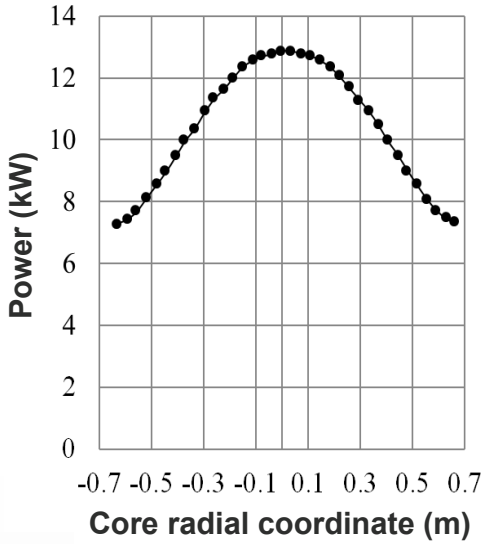

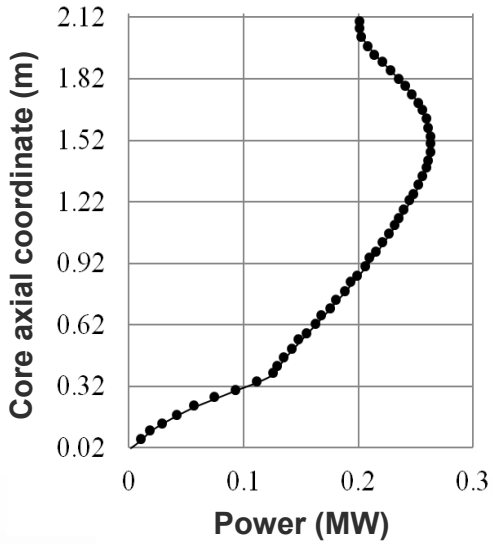

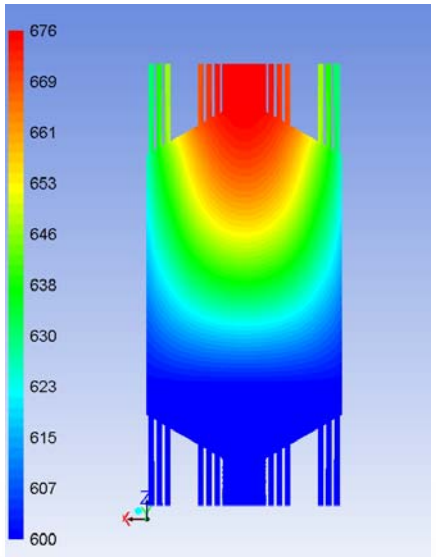

Core coolant temperature

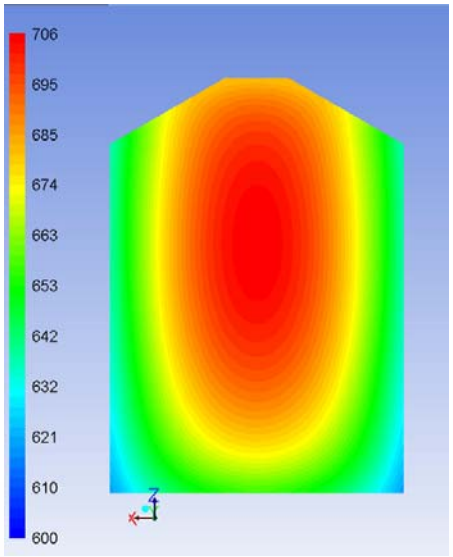

Fuel surface temperature

Region	Average Temp. (℃)	Minimum Temp. (℃)	Maximun Temp. (℃)
Coolant in core active zone	629	600	676
Fuel pebble surface	664	619	706
Fuel pebble center	723	-	774

Reactor vessel internals temperature distribution

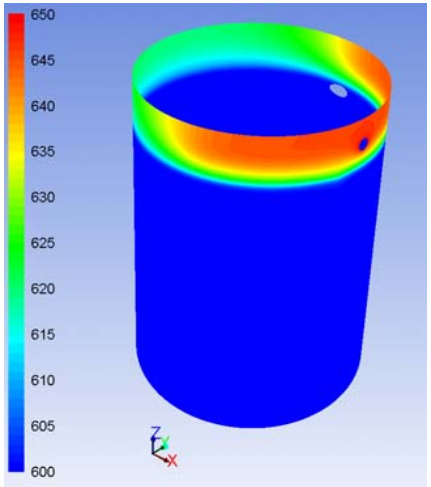

Reactor vessel Temp.

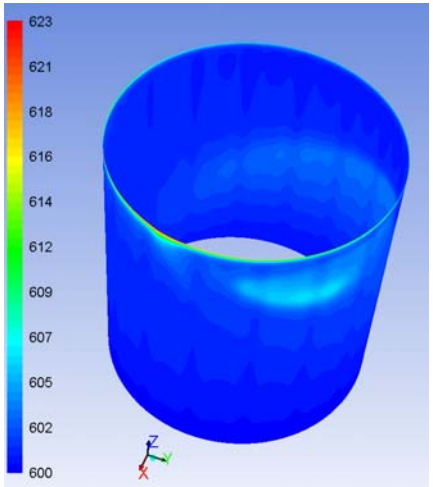

Core barrel Temp.

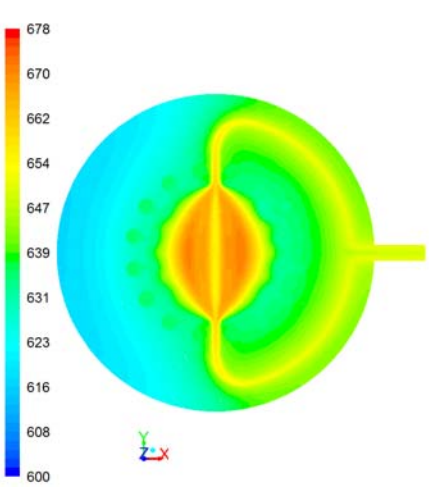

Upper plenum outlet pipe Temp.

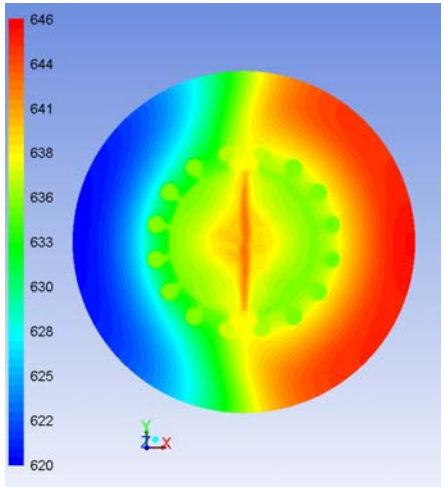

Upper plenum top lid Temp.

Region	Average Temp. (℃)	Minimum Temp. (℃)	Maximun Temp. (℃)
Side reflector	614	601	634
Upper reflector	650	628	676
Core barrel	601	600	623
Reactor vessel	604	600	650
Upper plenum	634	620	646

TMSR-SF1 TH design of the upper reactor & upper silo

Schematic layout of the upper reactor & upper silo

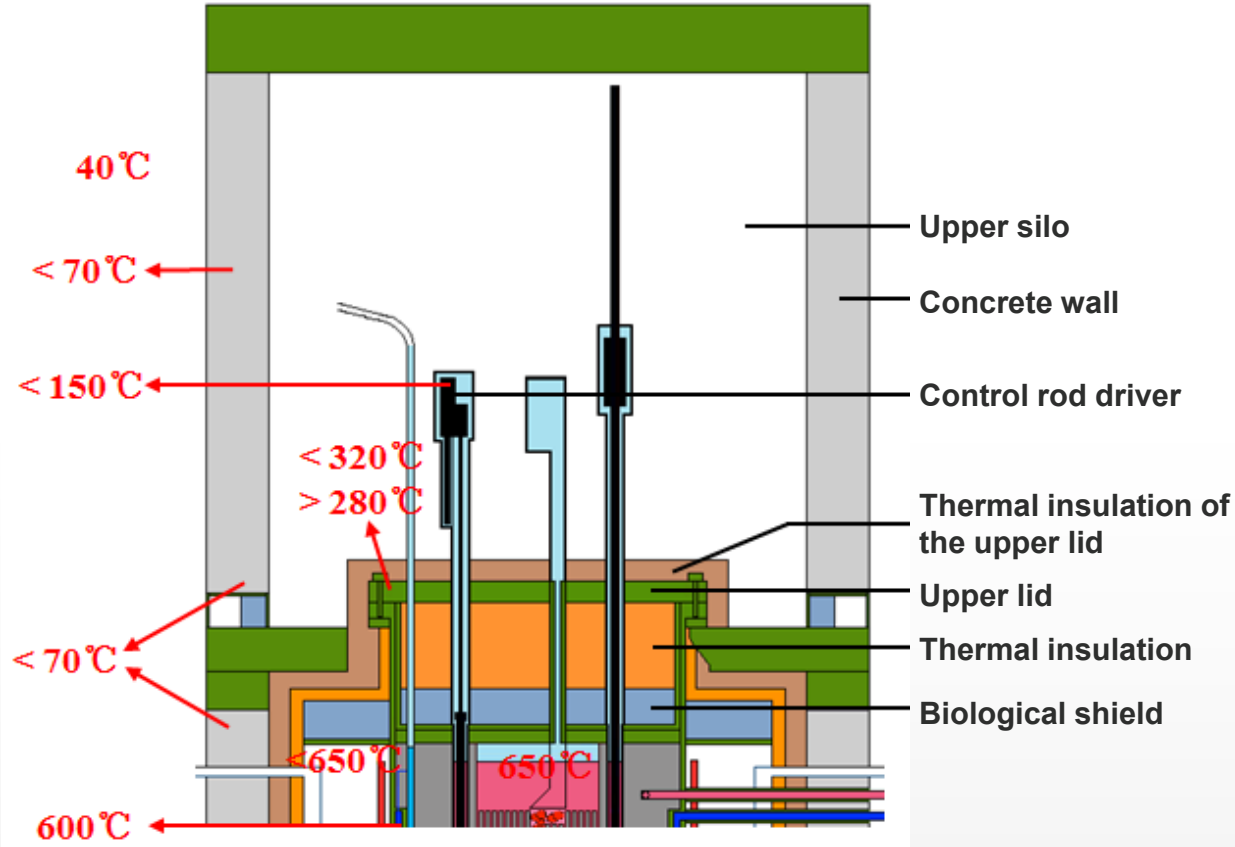

Temperature distribution of the upper reactor & upper silo

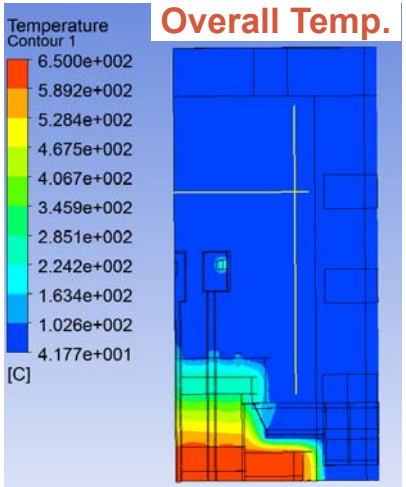

Overall Temp.

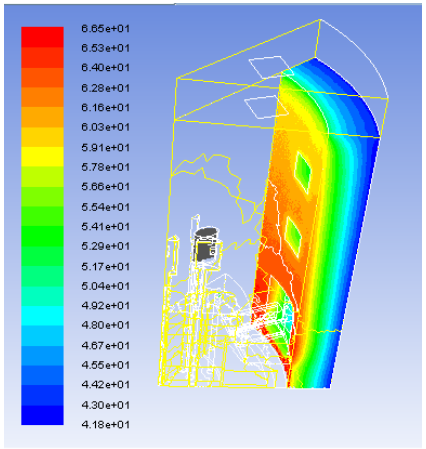

Concrete wall Temp.

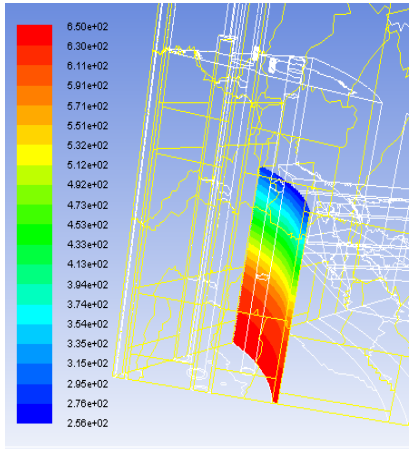

RV wall Temp.

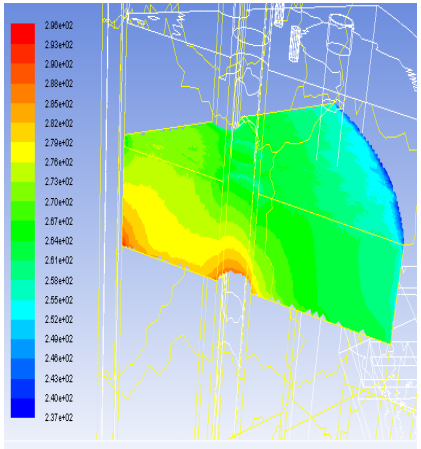

Upper lid Temp.

Region	Average Temp. (℃)	Minimum Temp. (℃)	Maximun Temp. (℃)
Biological shield	620	582	642
Upper lid	265	237	296
Reactor vessel wall	528	256	650
Reactor Support	65	47	228
Control rod guide tube	323	70	650
Gas in control rod driver shell	87	71	108
Gas in the upper silo	67	53	255
Concrete wall	50	42	66

TMSR-SF1 TH design of the lower silo & PRHR

Schematic layout of PRHR

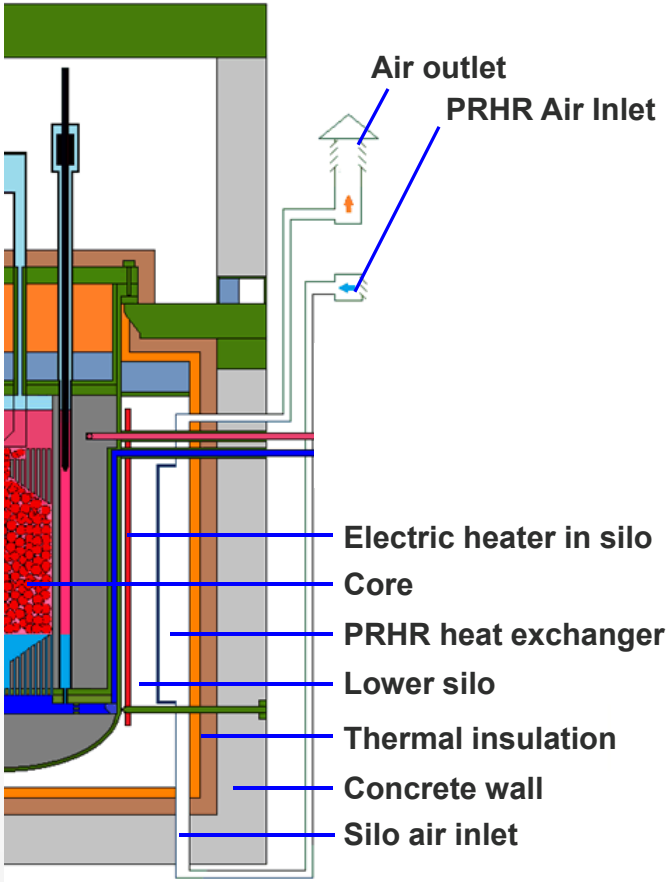

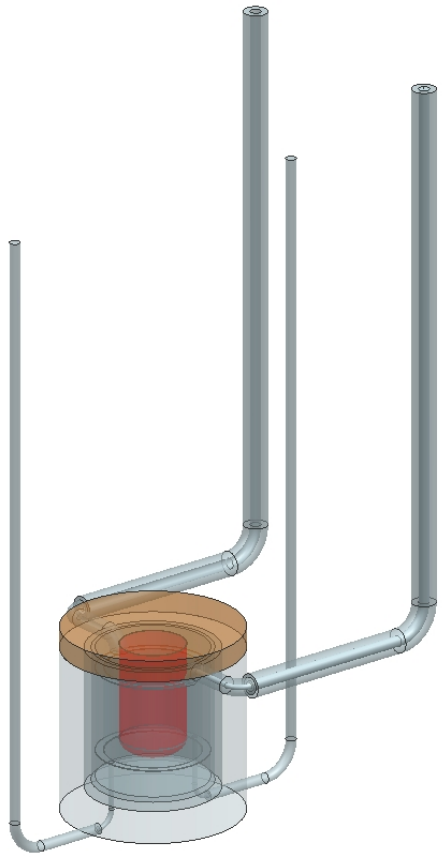

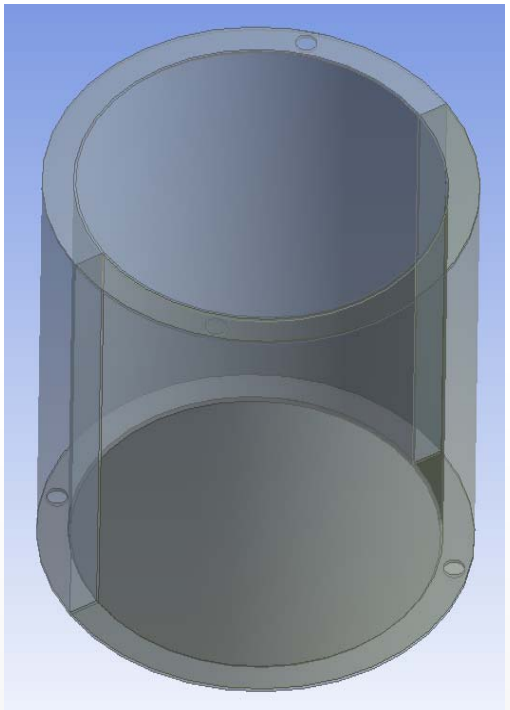

PRHR heat exchanger

Key design parameters of PRHR

Parameters	Shut down	Normal operation	Preheating
Air inlet temperature (℃)	40	40	40
Air temperature at PRHR HX outlet (℃)	304	530	556
Air outlet temperature (℃)	300	435	453
Air mass flow (kg/s)	0.752	0.060	0.060
Air door opening (1-fully open, 0-fully closed)	1	0.007	0.007
Temperature of reactor vessel outer wall (℃)	600	600	625
Temperature of PRHR heat exchanger inner wall (℃)	482	582	608
Temperature of inner/outer thermal insulation layer (℃)	482/431	582/523	608/547
Inner/outer temperature of the concrete wall (℃)	59.7/47.7	65.4/49.5	67/50
Environment temperature (℃)	40	40	40
Heat loss of the venting tower (kW)	200	30	31.6
Heat loss of the concrete wall (kW)	3.9	5.1	5.5
Heat loss of venting pipe inside the concrete wall (kW)	0.145	0.315	0.338
Heat loss of venting pipe outside the concrete wall (kW)	2.7	5.8	6.3

TMSR-LF1 TH design

Schematic layout of TMSR-LF1

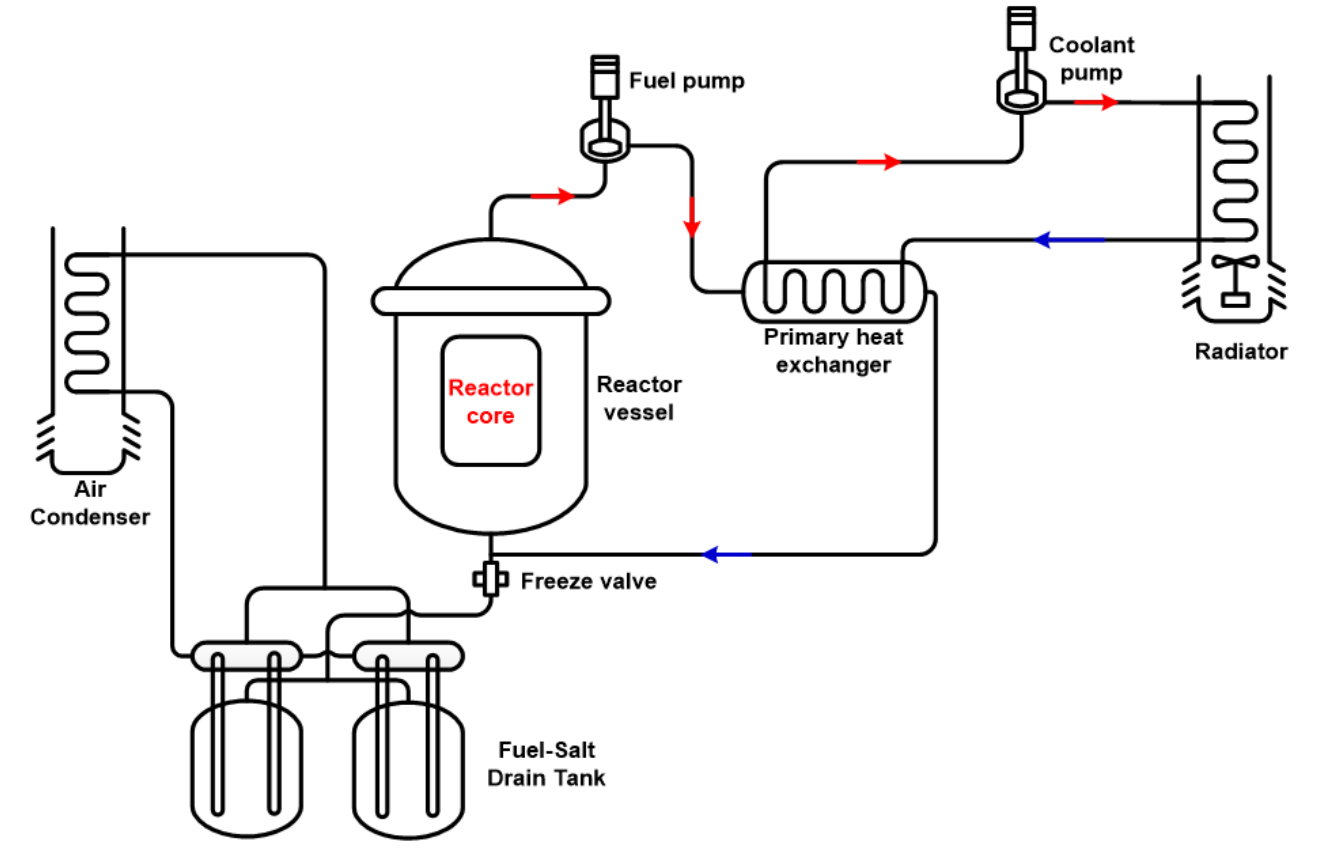

Schematic layout of TMSR-LF1

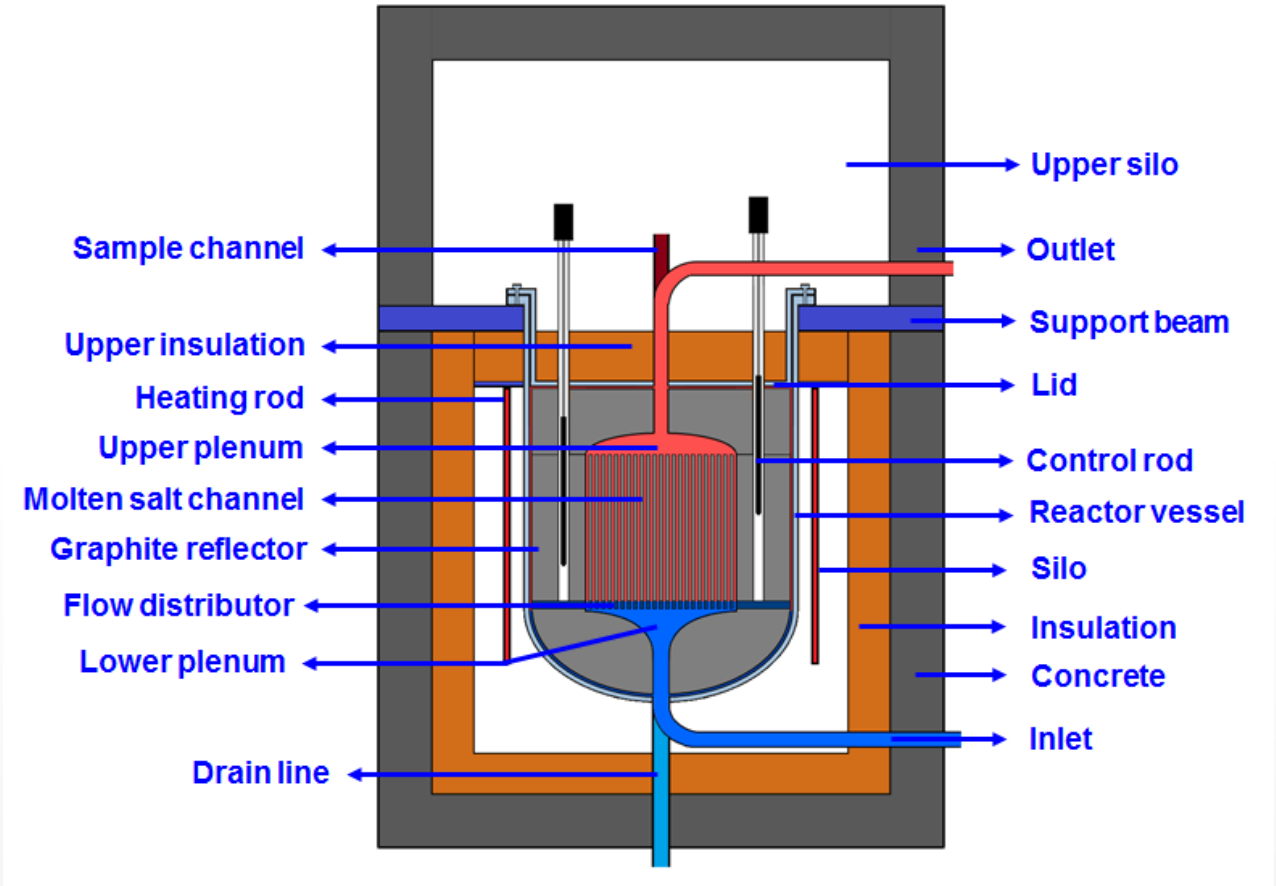

Key TH parameters of TMSR-LF1

Parameters	Value	Parameters	Value
Thermal power (MW)	2	Moderator	Graphite
Coolant in primary loop	$LiF-BeF_2-ThF_4-UF_4$	Coolant in secondary loop	LiF-NaF-KF
Fuel inlet temperature (℃)	600	Fuel outlet temperature (℃)	620
Coolant volume in core (m^3)	0.54	Coolant mass in core (600℃) (t)	1.38
Coolant velocity in primary loop (m/s)	1.75	Coolant mass flow in primary loop (kg/s)	55.34
Pressure drop in core (kPa)	< 20	Pressure drop in primary loop (kPa)	< 100
Pressure drop in heat exchanger (kPa)	< 100	Primary pump head (MPa)	0.3
Power of passive residual heat removal (kW)	100	Coolant evacuation time in primary loop (min)	30

Reactor flow and temperature distribution

3 candidate coolant channel arrangements

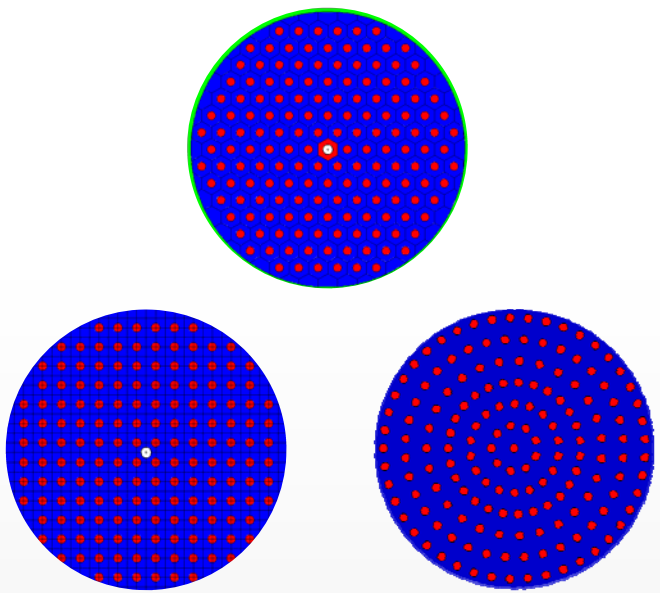

Flow distribution in reactor vessel

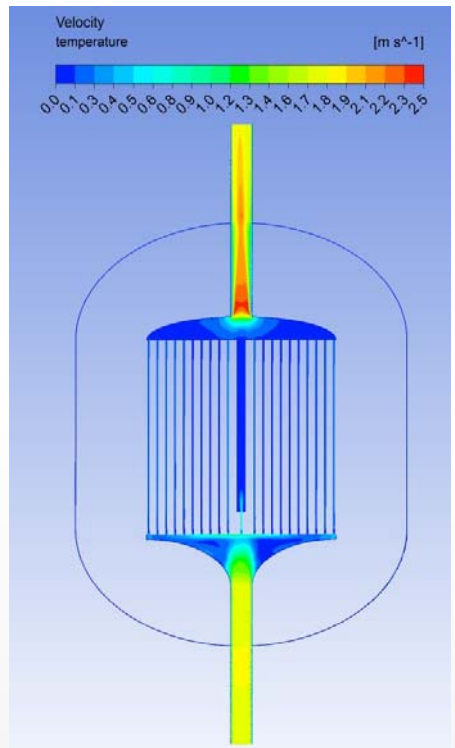

Temperature distribution in reactor vessel

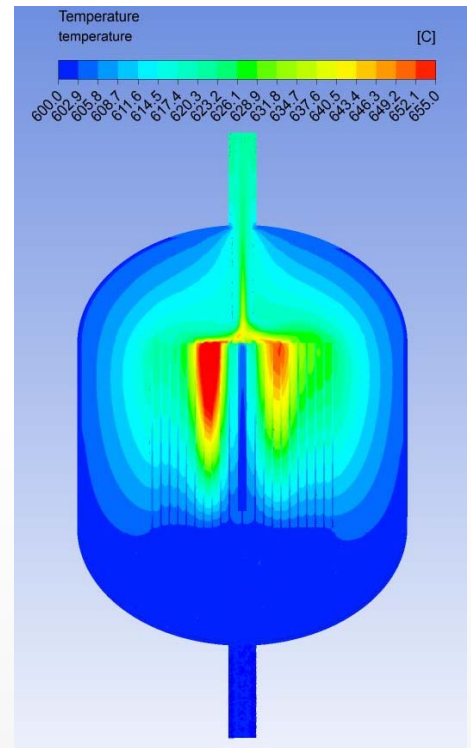

Schematic layout of PRHR

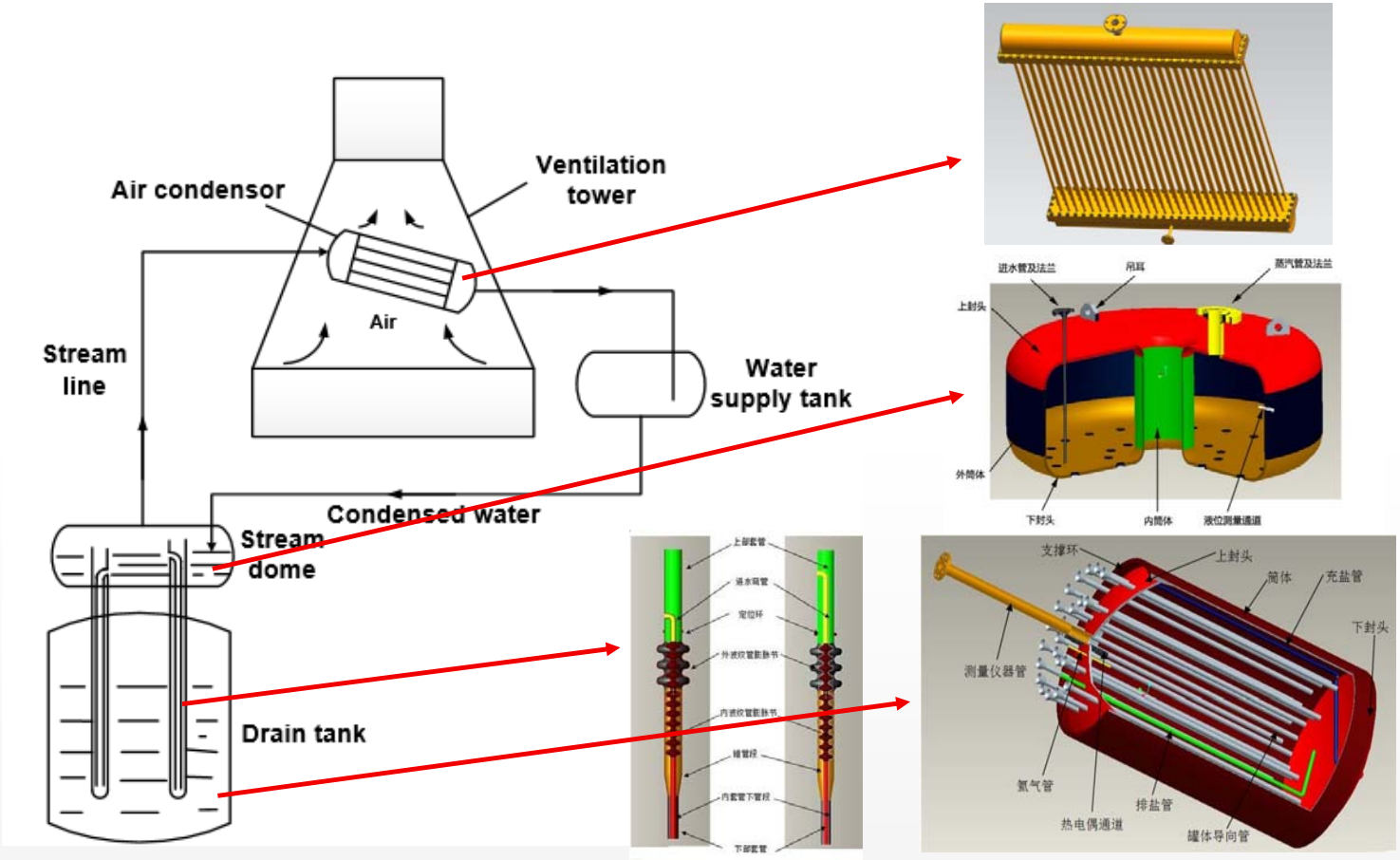

Questions?