NEUP Integrated Research Project -2, Workshop 1: FHR Code Benchmarking

Session 4: Materials Corrosion Testing in Molten FLiBe

April 15, 2016

Facilitators:

Tom Chrobak and Karl Britsch

(University of Wisconsin - Madison)

Session 4 Goals and Topics

Goals

1. Create a list of topics for materials
2. Materials selection & sourcing/sharing
    1. Inform panel of materials being investigated in static corrosion test at UW-Madison
3. Coordination of activities and capabilities
4. Identify benchmark topics
    1. Establish baseline FLiBe salt
        1. Chemical testing procedures
        2. Redox potential measurement standard
    2. Discuss electrochemical testing procedures in FLiBe salt

Motivation

- Understand and discuss various materials studies going on in different groups and form a cohesive experimental plan forward.

Topics

1. **Dynamic Chemistry Experiments**
2. Static Corrosion testing
3. Dynamic Corrosion Testing
4. FLiBe anomalies

UW Flow Loop Overview

- **Design Parameters:**
  - **550 – 800 C**
  - **3-5 cm/s flow**
  - **Redox control**
  - **Sample inserts**
  - **Online beryllium additions**

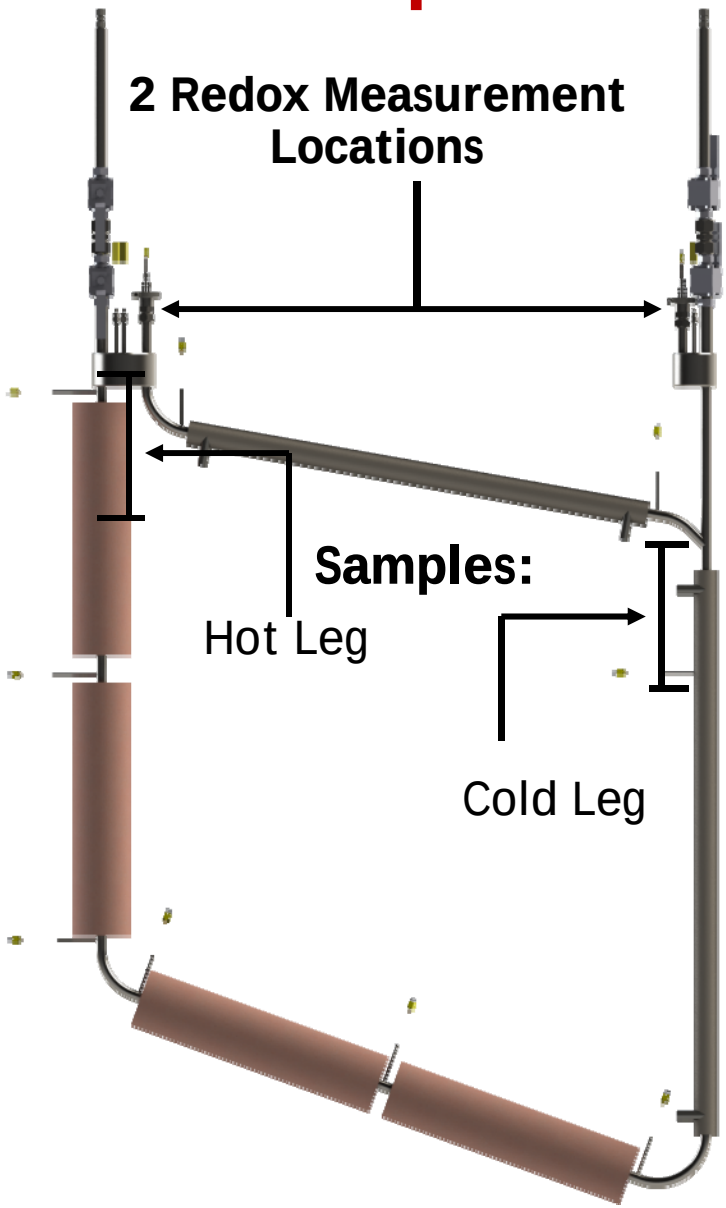

Measurements

- **Direct**
  - **Temperature**
  - **Redox**
  - **Power input**
  - **Cooling fan power**
- **Indirect**
  - **Flow velocity**
  - **Mass Transport**
  - **Heat transfer coefficients**

Dynamic Salt Chemistry

- **Add beryllium to one tank and wait for a redox change in the other**
  - **Flow through tank -> nearly instant change**
  - **Off-set tank -> Delay**

- **For a given redox eventually reach quasi steady-state: chromium leached from piping in hot legs and deposited in cold legs**

- **Are there other tests to run?**

- **Do we need to worry about plate-out of materials (Cr) on the loop piping affecting later corrosion testing?**

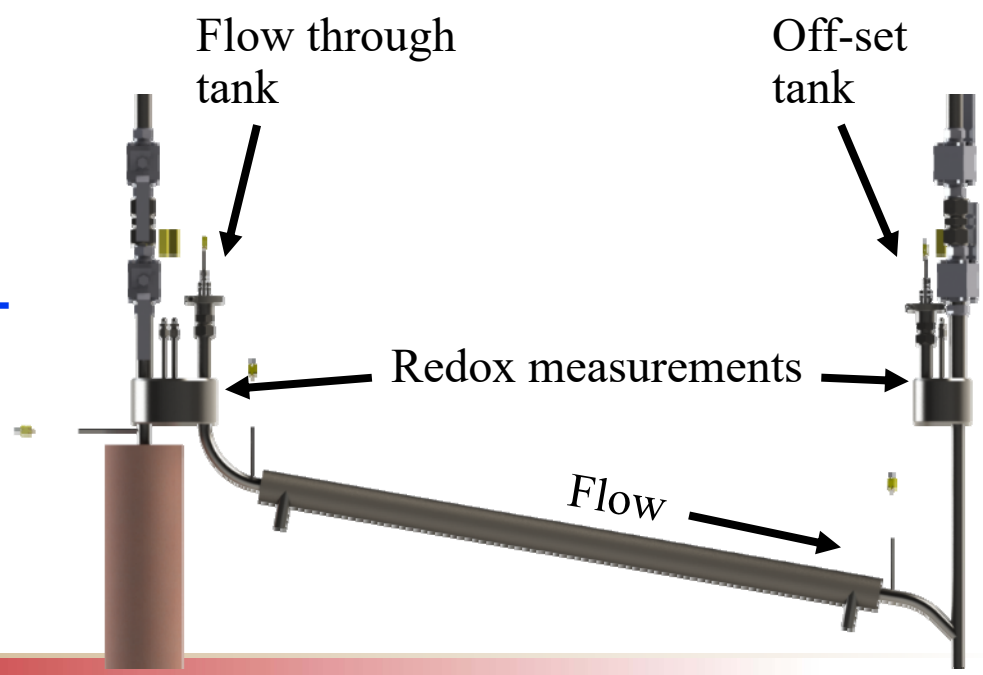

Flow Affects on Redox

- Main loop piping
  - Redox will vary with time as salt circulates
- Off-set tank -> Delayed redox change
  - Dependent upon riser boundary conditions
  - Leg up to tank might not be static (e.g. [1])
  - Should we encourage recirculation in this leg?
  - Or aim for static diffusion only in this leg?
  - Likely will be a large uncertainty:

  is this data still valuable?

- Does any mass-transport time constant carry physical meaning outside of this loop?
- Should we measure other mass transports? (e.g. Nickel Fluorides)

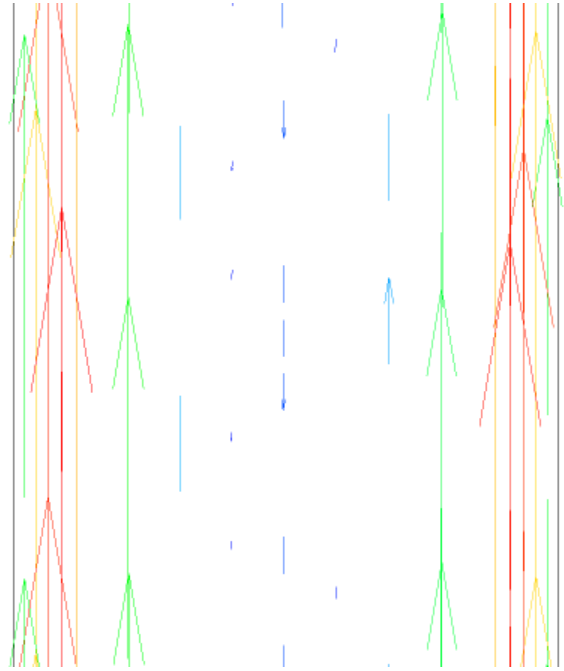

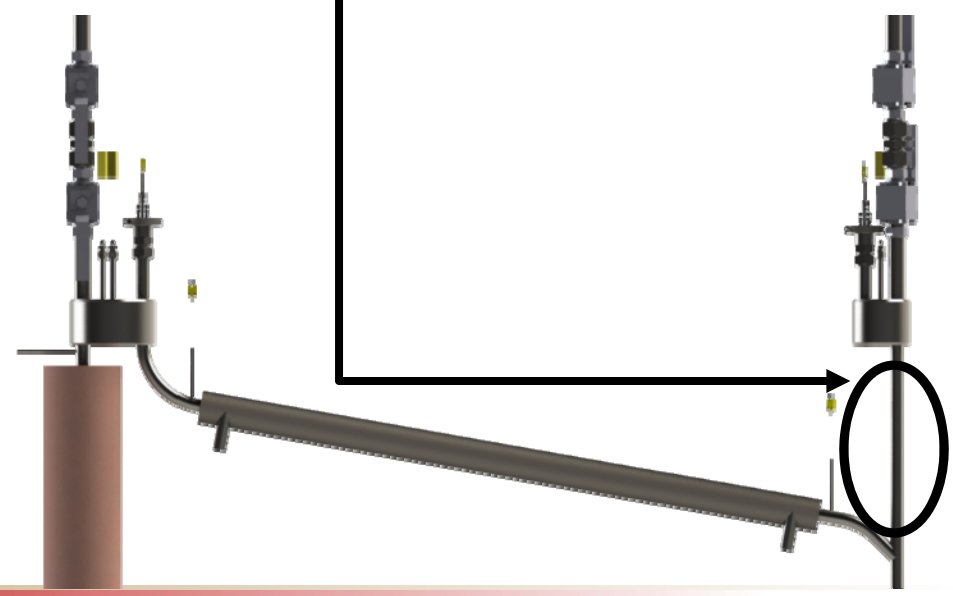

1. *Scarlat, R. O. Design of Complex Systems to Achieve Passive Safety: Natural Circulation Cooling of Liquid Salt Pebble Bed Reactors. eScholarship (2012).*

Topics

1. Dynamic Chemistry Experiments
2. **Static Corrosion testing**
3. Dynamic Corrosion Testing
4. FLiBe anomalies

UW Static corrosion test

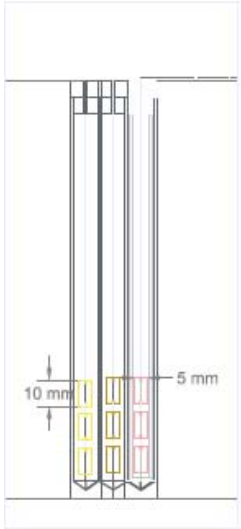

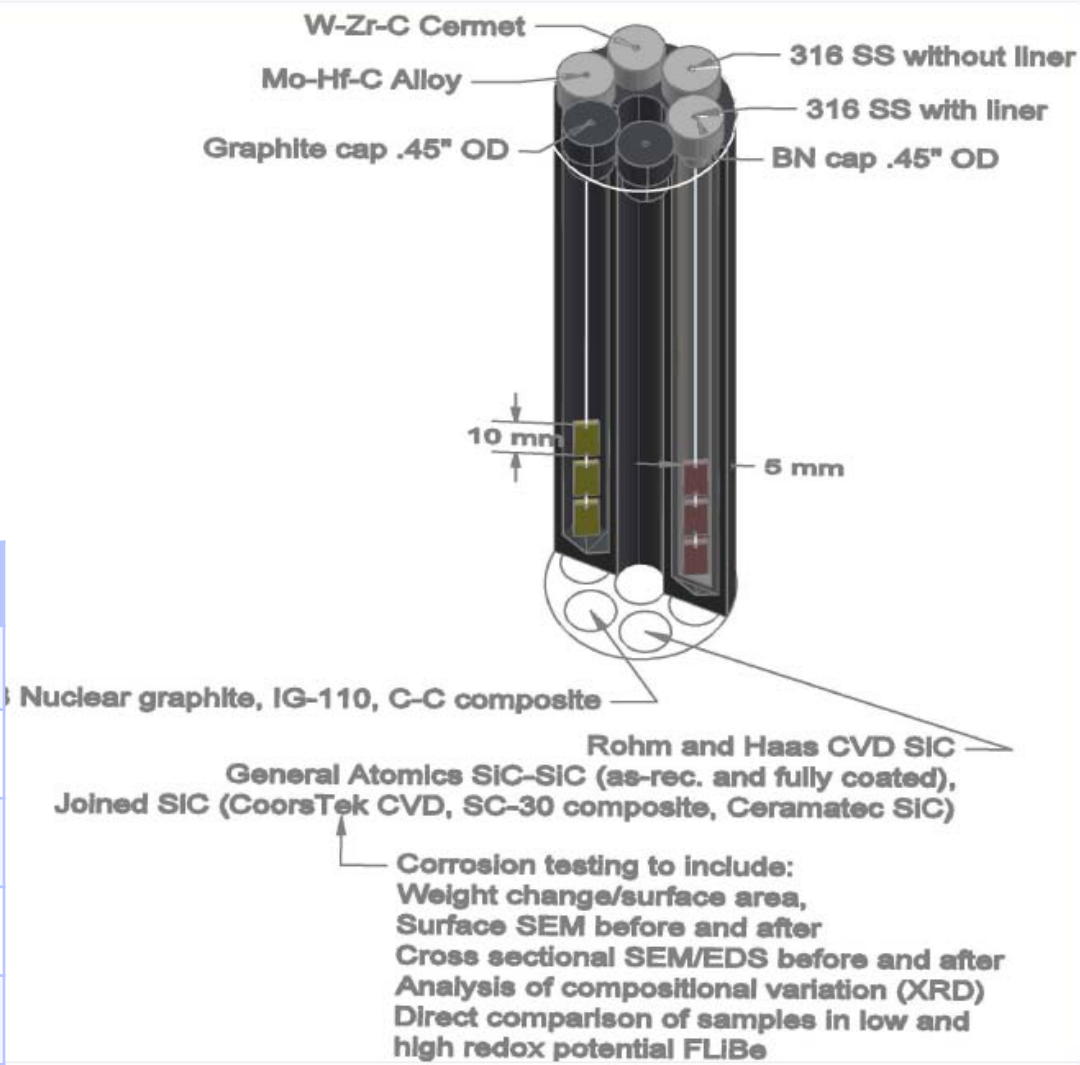

Crucible 1: -1.69V UW FLiBe	Crucible 2: -1.45V UW FLiBe
Hole 1: SiC → 3x SiC-SiC samples, 1x bulk SiC sample	
Hole 2: Nuclear Graphite → 3x matrix graphite samples, 1x IG-110 sample	
Hole 3: No liner. Mo-Hf-C → 3x Mo-Hf-C alloy samples with Mo wire suspension*	
Hole 4: No liner. W-Zr-C → 3x W-Zr-C Cermet samples with W wire suspension*	
Hole 5: No liner. 316 SS → 3x 316 samples with SS wire suspension*	
Hole 6: With 316 SS liner. 316 SS → 3x 316 samples with SS wire suspension*	

Materials testing in static corrosion test

- 2 IG-110 crucibles, 2 redox potentials, 5 materials in each
  - » -1.45V Be reduced and filtered, -1.69V Unreduced
  - » Metal Samples: Mo-Hf-C W/ZrC 316 SS
  - » Other samples: SiC-SiC (GA, CoorsTek) Graphite (Nuclear, IG-110)
  - » Samples electrically isolated from crucible with BN caps
  - Some 316 SS samples corrode in 316 SS liners instead of graphite
    - » Observe carbon interaction with 316 SS
    - » Carburization observed?
    - » Carbon precipitating on surface?
    - » Corrosion rate increase/decrease?
  - Compare identical samples from different salts before and after exposure
    - » SEM/EDS
      - Surface and Cross-Section to observe depth of attack
    - » Mass change → overall corrosion rate
  - SiC samples will be resting at bottom of crucible. Will this be an issue?
  - Other things to compare between samples?

Capabilities for molten fluoride corrosion studies at Georgia Tech

FLiNaK corrosion experiments in controlled atmosphere.

- **Ar atmosphere glovebox (<1 ppm O_2, <5 ppm H_2O).**
  - **With interior furnace**
- **Potentiostats**
  - **Gamry Reference 600 and PAR 263A**
- **Ni/Ni^{2+} reference electrode**

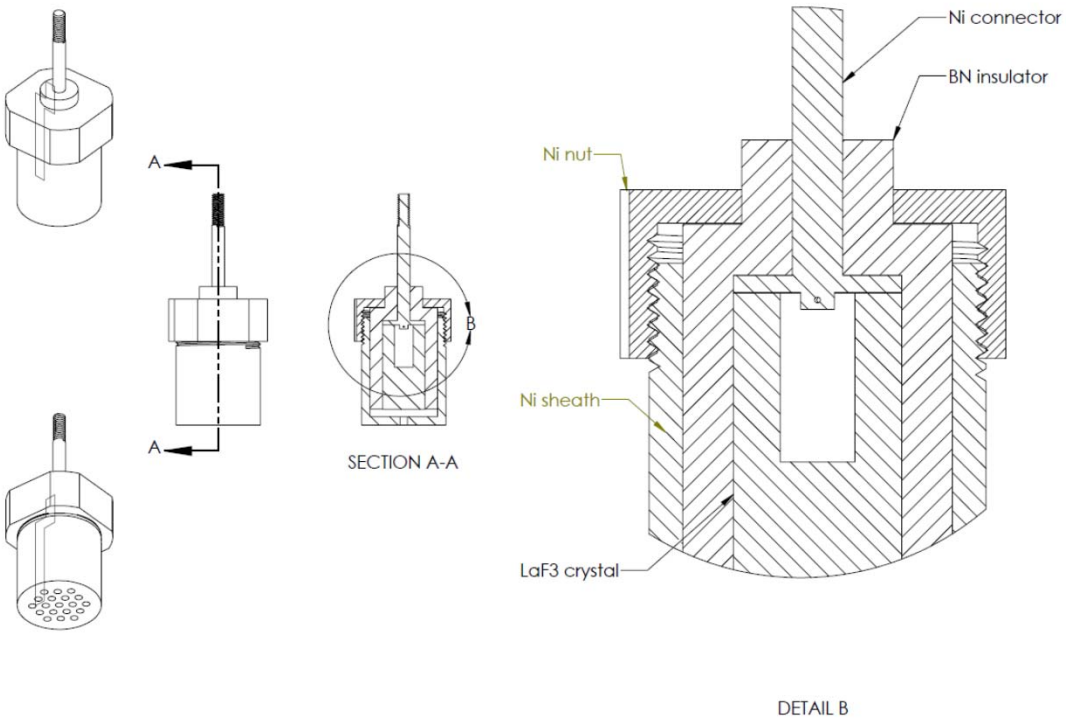

Research activity at Georgia Tech

- **Ongoing work**
  - **Validation of Ni/Ni^{2+} reference electrode for FLiNaK redox potential measurements.**
  - **Study effect of H_2O and Ni^{2+} impurities on corrosion of Hastelloy N.**
  - **Study effect of Ti and Nb stabilization on corrosion of austenitic stainless steels (304L vs 321 & 347).**
- **Future work**
  - **Study how redox potential is affected by impurity concentrations.**
  - **Gather potentiodynamic polarization data for Hastelloy N and other alloys.**
- **Wear-resistant material selection for valves and pumps in coolant loops?**
- **Corrosion behavior of wear-resistant materials and surface modifications?**

Topics

1. Dynamic Chemistry Experiments
2. Static Corrosion testing
3. **Dynamic Corrosion Testing**
4. FLiBe anomalies

Materials Testing Under Dynamic Flow

2 Types of sample holders:

- **316 SS Samples on 316 SS holder**
  - **Times: 300, 1000, 2000 hr (?)**
  - **2 redox states**
  - **Temperature: 700 C (?)**
  - **Would multiple temperatures matter?**
- **Isolated samples held in BN**
  - **Same treatment**
  - **316 SS**
  - **Hastelloy – N**
  - **SiC/SiC composite (erosion testing)**
  - **Nickel or Moly for deposition?**
  - **Graphite? Possible effects at different redox potentials?**
- **Would we expect corrosion in the cover gas space above salt?**

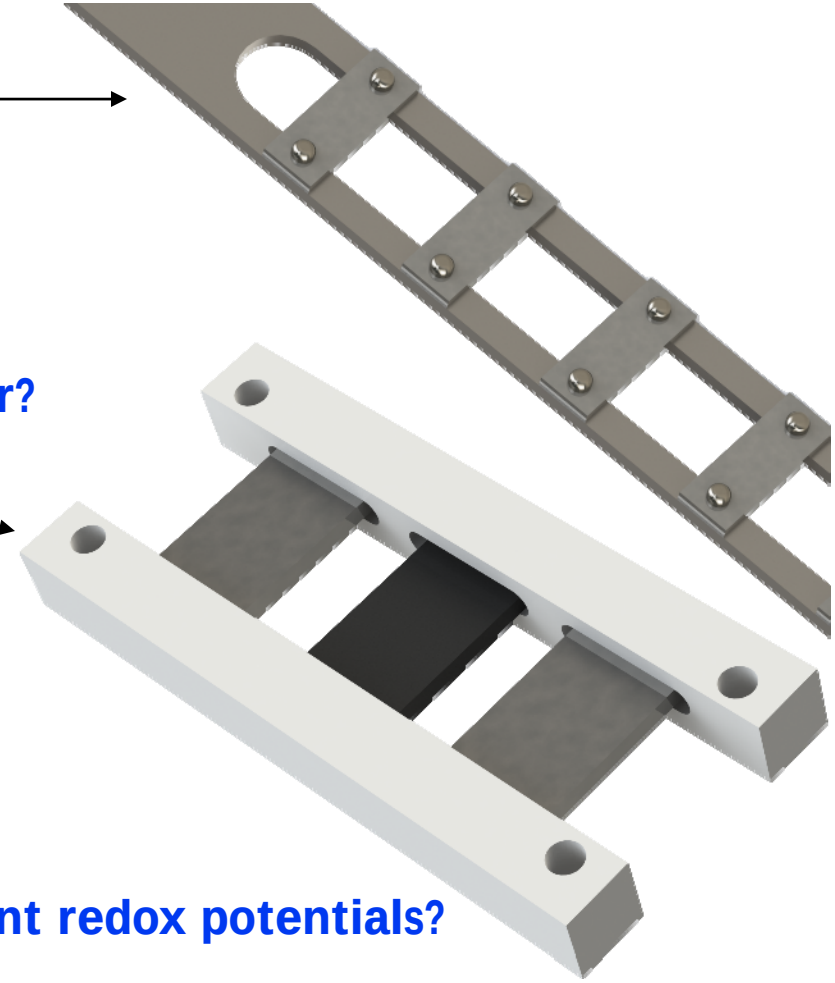

Impact of Flow on corrosion

- **Flow rates 1-10 [cm/s]**
  - **Continuous supply of fresh salt**
  - **Will contain Cr from loop pipes**
- **Stratified Flow**
  - **Nearly static core**
  - **Fast moving edges**
  - **Samples will disrupt flow**
- **SiC/SiC we expect erosion**
  - **Will this be fast enough?**
- **Will Flow rates matter?**
- **How closely do we need to characterize the flow for corrosion?**

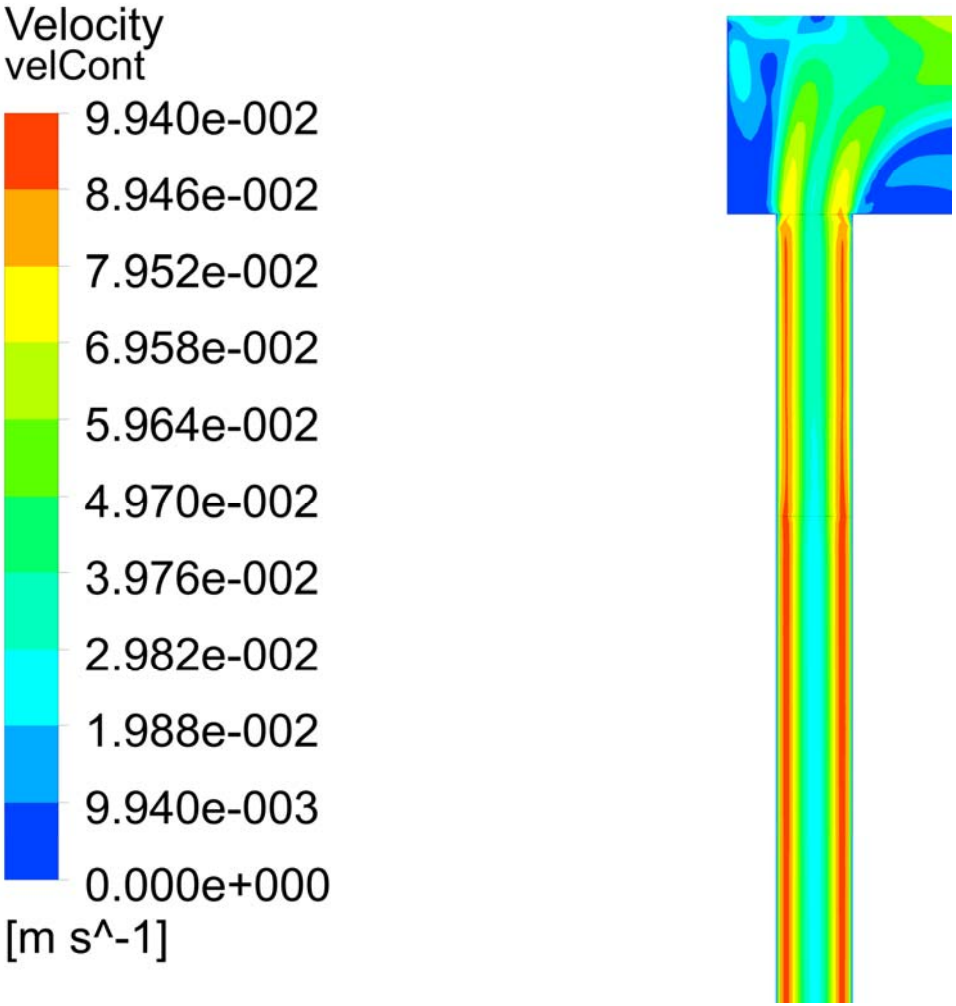

Topics

1. Dynamic Chemistry Experiments
2. Static Corrosion testing
3. Dynamic Corrosion Testing
4. **FLiBe anomalies**

FLiBe anomalies

- **Severe darkening of salt following failed filtration run**
  - » Be-reduced FLiBe inside 316SS crucible at 700C for 3 hours turned dark grey upon cooling
- **Reversing polarity of redox potential scans using potentiostat caused wetting to glassy carbon crucible**
  - » Error with first attempt resulted in making the glassy carbon rod and crucible the working electrode, causing severe wetting interaction of salt with crucible.
  - » After cooling, salt is completely stuck in GC crucible
- **Color changes through oxidation and reduction**
  - » Green tint when metallic impurity fluorides (CrF_2, NiF_2, FeF_2) dissolved
  - » Grey sheen when reduced with Be
    - Fluorides reduced to Fe, Ni, Cr – visible metallic pieces
    - FLiBe-glassy carbon interface has some carbon flocculation or diffusion into surface layer of salt?
- **Increased wetting characteristics following Be addition**
  - » Convex surface before reduction
  - » Concave surface after reduction.

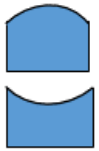

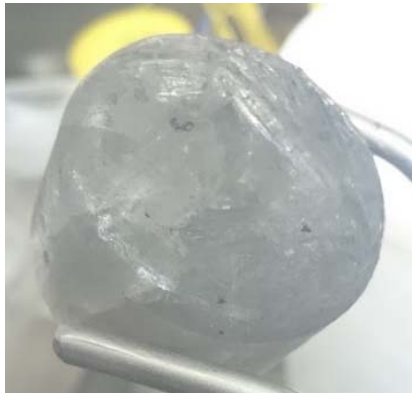

Recap of Questions

1. How can we best control the salt chemistry? We need to be able to quantify the changes being made and determine the materials present in the salt.
2. In the limited amount of time before corrosion testing, how can the redox measurement capabilities of the flow loop be best put to use to expand the knowledge of salt chemistry in relation to a system such as the FHR?
3. Once the flow loop corrosion testing is underway, what parameters will have the largest effect on sample corrosion? Of these parameters, which are valuable to the FHR project?
4. For static corrosion tests in graphite, are the interactions from graphite a cause for concern?

Thank You!!